Quarter-turn lock, stainless steel with wing grip

Item description/product images

Description

Material:
Quarter-turn lock 1.4401 stainless steel.
Tongue 1.4301 stainless steel.

Version:
Bright.
Grip polished.

Note:
Quarter-turn lock with wing grip. Right or left deployment. The lock can be installed pre-assembled.

Water and dust tight according to IP65.

Please order the desired tongue type separately. Every tongue can be combined with every housing.

Drawings

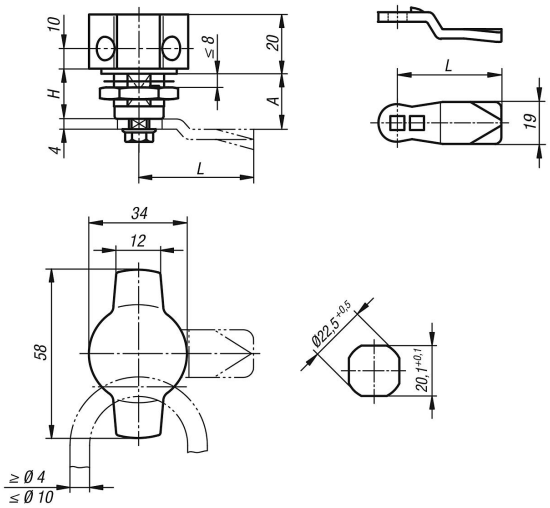

Quarter-turn lock, stainless steel with wing grip

Overview of items

Quarter-turn lock, stainless steel with wing grip

Order No.	Actuation	H
K1358.18	lockable grip	18

Tongue for quarter-turn lock

Order No.	A	L
K1340.45060	6	45
K1340.45080	8	45
K1340.45100	10	45
K1340.45140	14	45
K1340.45160	16	45
K1340.45180	18	45
K1340.45200	20	45
K1340.45220	22	45
K1340.45240	24	45
K1340.45260	26	45
K1340.45280	28	45
K1340.45320	32	45
K1340.45500	50	45

© HEINRICH KIPP WERK GmbH & Co. KG