Latch DIN 3133

Item description/product images

Description

Material:
Stainless steel 1.4301.

Version:
Vibratory ground.

Note:
For quickly locking vertical or horizontal lids and hatches.
With security seal possibility.

Drawings

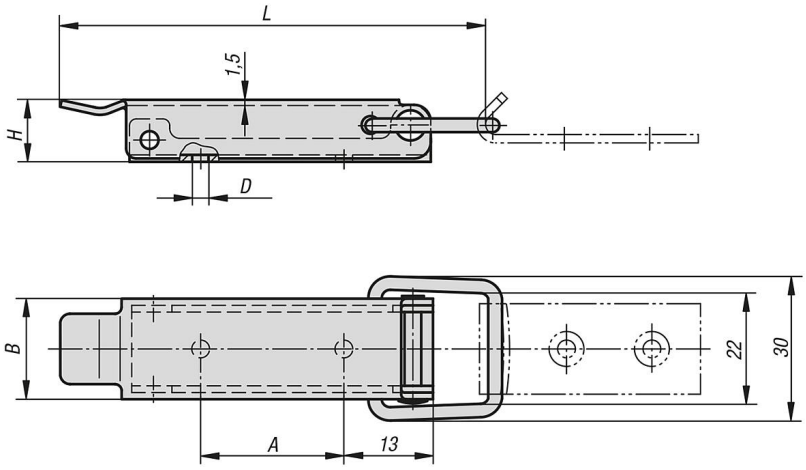

Overview of items

Order No.	L	B	H	A	D
K1336.350742	70	18	12	22	3,5

© HEINRICH KIPP WERK GmbH & Co. KG