Handwheels, crank handles, position indicators

Handwheels 2-spoke

plastic

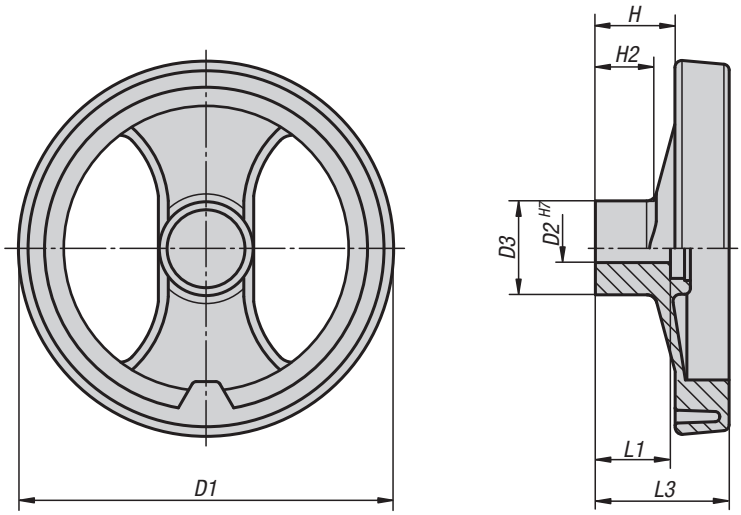

Material:
Handwheel, reinforced and stabilised polyamide.
Centre caps, polyamide.
Centre bushes, steel.

Version:
Handwheel, oil and grease resistant, black (RAL 9011), satin finish.
Centre caps, grey (RAL 7035).
Centre bushes, black oxidised.

Sample order:
K0725.0080X08

On request:
Other cap colours.
Special versions.

DIN 6885-1

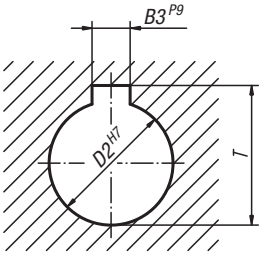

KIPP Handwheels 2-spoke, plastic

Order No. reamed hole	Order No. reamed hole with slot	D1	D2	D3	H	H2	L1	L3	B3	T
K0725.0080X08	**K0725.1080X08**	80	8H7	24,5	20	16	20	34	-/2	-/9
K0725.0080X10	**K0725.1080X10**	80	10H7	24,5	20	16	20	34	-/3	-/11,4
K0725.0100X10	**K0725.1100X10**	99	10H7	28	25,5	20	24	42	-/3	-/11,4
K0725.0100X12	**K0725.1100X12**	99	12H7	28	25,5	20	24	42	-/4	-/13,8
K0725.0130X12	**K0725.1130X12**	129	12H7	32	30	21	24	50	-/4	-/13,8
K0725.0130X14	**K0725.1130X14**	129	14H7	32	30	21	24	50	-/5	-/16,3
K0725.0160X14	**K0725.1160X14**	159	14H7	40	33	22	32	57	-/5	-/16,3
K0725.0160X16	**K0725.1160X16**	159	16H7	40	33	22	32	57	-/5	-/18,3
K0725.0200X16	**K0725.1200X16**	198	16H7	51	31	17,5	32	60	-/5	-/18,3
K0725.0200X20	**K0725.1200X20**	198	20H7	51	31	17,5	32	60	-/6	-/22,8
K0725.0250X20	**K0725.1250X20**	252	20H7	55,5	39,5	24	36	71	-/6	-/22,8
K0725.0250X24	**K0725.1250X24**	252	24H7	55,5	39,5	24	36	71	-/8	-/27,3
K0725.0345X20	**K0725.1345X20**	346	20H7	67,5	42	24	32	79	-/6	-/22,8

Handwheels 2-spoke

plastic, with revolving grip

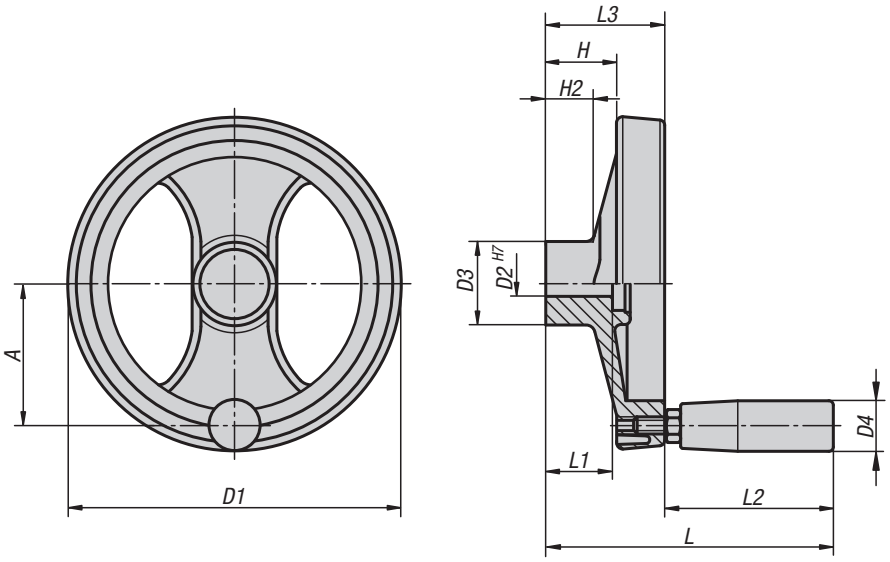

Material:
Handwheel, reinforced and stabilised polyamide.
Centre caps, polyamide.
Centre bushes, steel.
Tapped insert for cylinder grip, brass.

Version:
Handwheel, oil and grease resistant, black (RAL 9011), satin finish.
Centre caps, grey (RAL 7035).
Centre bushes, black oxidised.

Sample order:
K0725.4080X08

On request:
Other cap colours.
Special versions.

DIN 6885-1

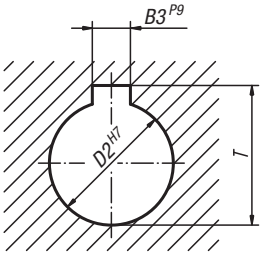

KIPP Handwheels 2-spoke, plastic, with revolving grip

Order No. reamed hole	Order No. reamed hole with slot	D1	D2	D3	D4	H	H2	A	L	L1	L2	L3	B3	T
K0725.4080X08	**K0725.5080X08**	80	8H7	24,5	20	20	16	30	85	20	51	34	-/2	-/9
K0725.4080X10	**K0725.5080X10**	80	10H7	24,5	20	20	16	30	85	20	51	34	-/3	-/11,4
K0725.4100X10	**K0725.5100X10**	99	10H7	28	20	25,5	20	38	93	24	51	43	-/3	-/11,4
K0725.4100X12	**K0725.5100X12**	99	12H7	28	20	25,5	20	38	93	24	51	43	-/4	-/13,8
K0725.4130X12	**K0725.5130X12**	129	12H7	32	23	30	21	55	112	24	62	50	-/4	-/13,8
K0725.4130X14	**K0725.5130X14**	129	14H7	32	23	30	21	55	112	24	62	50	-/5	-/16,3
K0725.4160X14	**K0725.5160X14**	159	14H7	40	23	33	22	66	119	32	62	57	-/5	-/16,3
K0725.4160X16	**K0725.5160X16**	159	16H7	40	23	33	22	66	119	32	62	57	-/5	-/18,3
K0725.4200X16	**K0725.5200X16**	198	16H7	51	26	31	17,5	82	141	32	81	60	-/5	-/18,3
K0725.4200X20	**K0725.5200X20**	198	20H7	51	26	31	17,5	82	141	32	81	60	-/6	-/22,8
K0725.4250X20	**K0725.5250X20**	252	20H7	55,5	27	39,5	24	113	163	36	92	71	-/6	-/22,8
K0725.4250X24	**K0725.5250X24**	252	24H7	55,5	27	39,5	24	113	163	36	92	71	-/8	-/27,3
K0725.4345X20	**K0725.5345X20**	346	20H7	67,5	27	42	24	146	171	32	92	79	-/6	-/22,8

Handwheels 2-spoke

plastic, with folding grip

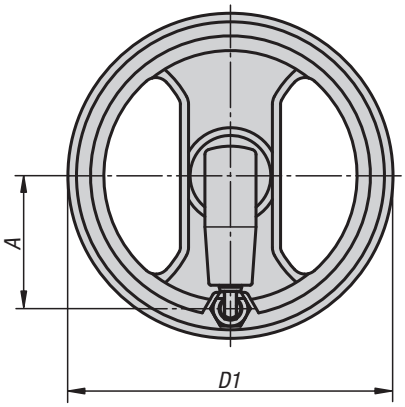

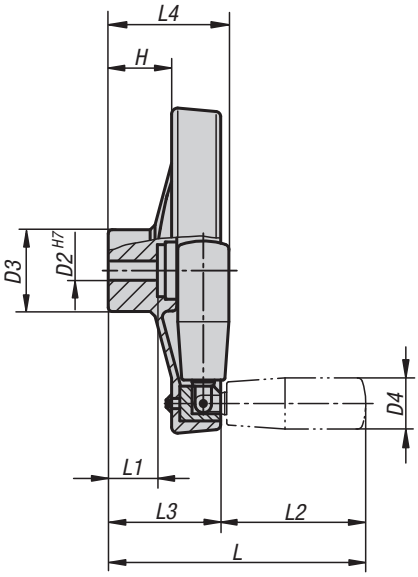

Material:
Handwheel, reinforced and stabilised polyamide.
Centre caps, polyamide.
Centre bush and tapped insert for cylinder grip, steel.

Version:
Handwheel, oil and grease resistant, black (RAL 9011), satin finish.
Centre caps, grey (RAL 7035).
Centre bush and tapeed insert for folding grip, black oxidised.

Sample order:
K0725.6130X12

On request:
Other cap colours.
Special versions.

DIN 6885-1

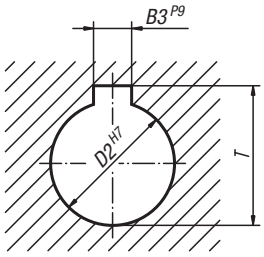

KIPP Handwheels 2-spoke, plastic, with folding grip

Order No. reamed hole	Order No. reamed hole with slot	D1	D2	D3	D4	A	H	L	L1	L2	L3	L4	B3	T
K0725.6130X12	**K0725.7130X12**	129	12H7	32	20	51	29	111	20	59	52	53	-/4	-/13,8
K0725.6130X14	**K0725.7130X14**	129	14H7	32	20	51	29	111	20	59	52	53	-/5	-/16,3
K0725.6160X14	**K0725.7160X14**	159	14H7	40	25	65	31	126	24	71	55	59	-/5	-/16,3
K0725.6160X16	**K0725.7160X16**	159	16H7	40	25	65	31	126	24	71	55	59	-/5	-/18,3
K0725.6200X16	**K0725.7200X16**	200	16H7	54,5	27	80	33	160	28	91	69	69	-/5	-/18,3
K0725.6200X20	**K0725.7200X20**	200	20H7	54,5	27	80	33	160	28	91	69	69	-/6	-/22,8
K0725.6345X20	**K0725.7345X20**	346	20H7	67,5	27	148	43,5	144	32	91	80	80	-/6	-/22,8

Notes

Handwheels 2-spoke

flat rim, aluminium

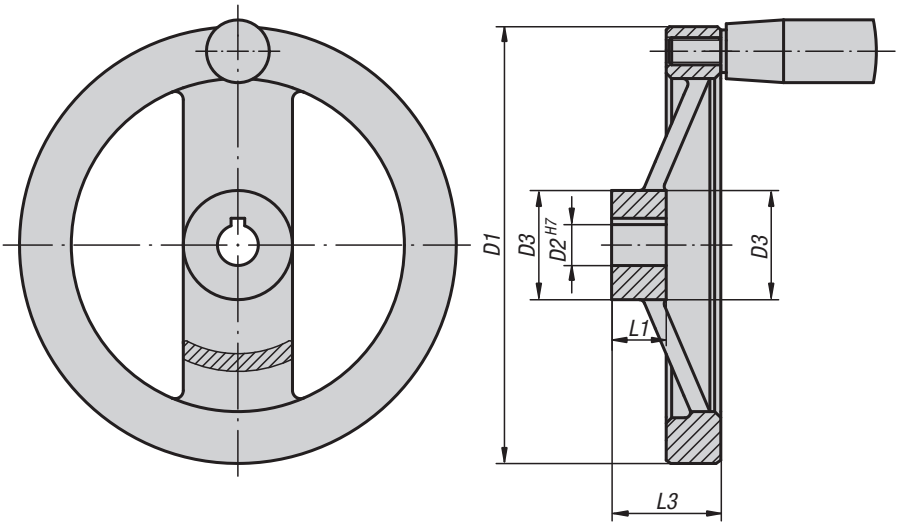

Material:
Handwheels aluminium.
Cylinder grip black thermoset PF 31-DIN 7708, centre pin electro zinc-plated steel.

Version:
Wheel rim turned and polished.
Radial and axial run-out of rim < IT 12.

Sample order:
K0162.4080X10

On request:
Hubs with square socket or powder-coated handwheels.

DIN 6885-1

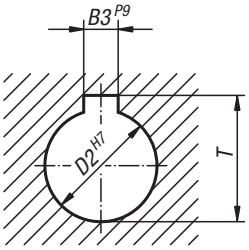

KIPP Handwheels 2-spoke, aluminium, flat wheel rim, without grip

Order No. reamed hole	Order No. reamed hole with slot	D1	D2	D3	L1	L3	B3	T
K0162.0080X10	K0162.1080X10	80	10H7	24	16	28	-/3	-/11,4
K0162.0080X12	K0162.1080X12	80	12H7	24	16	28	-/4	-/13,8
K0162.0100X10	K0162.1100X10	100	10H7	26	17	33	-/3	-/11,4
K0162.0100X12	K0162.1100X12	100	12H7	26	17	33	-/4	-/13,8
K0162.0125X12	K0162.1125X12	125	12H7	31	18	33,5	-/4	-/13,8
K0162.0125X14	K0162.1125X14	125	14H7	31	18	33,5	-/5	-/16,3
K0162.0160X14	K0162.1160X14	160	14H7	40	20	39	-/5	-/16,3
K0162.0160X16	K0162.1160X16	160	16H7	40	20	39	-/5	-/18,3
K0162.0200X18	K0162.1200X18	200	18H7	42	24	45	-/6	-/20,8
K0162.0200X20	K0162.1200X20	200	20H7	42	24	45	-/6	-/22,8
K0162.0250X22	K0162.1250X22	250	22H7	48	28	51	-/6	-/24,8
K0162.0250X26	K0162.1250X26	250	26H7	48	28	51	-/8	-/29,3

Handwheels 2-spoke

flat rim, aluminium

KIPP Handwheels 2-spoke, aluminium, flat wheel rim, with fixed cylinder grip

Order No. reamed hole	Order No. reamed hole with slot	D1	D2	D3	L1	L3	B3	T	Fixed cylinder grip
K0162.2080X10	K0162.3080X10	80	10H7	24	16	28	-/3	-/11,4	ø18 x M6 x 40
K0162.2080X12	K0162.3080X12	80	12H7	24	16	28	-/4	-/13,8	ø18 x M6 x 40
K0162.2100X10	K0162.3100X10	100	10H7	26	17	33	-/3	-/11,4	ø18 x M6 x 40
K0162.2100X12	K0162.3100X12	100	12H7	26	17	33	-/4	-/13,8	ø18 x M6 x 40
K0162.2125X12	K0162.3125X12	125	12H7	31	18	33,5	-/4	-/13,8	ø21 x M8 x 50
K0162.2125X14	K0162.3125X14	125	14H7	31	18	33,5	-/5	-/16,3	ø21 x M8 x 50
K0162.2160X14	K0162.3160X14	160	14H7	40	20	39	-/5	-/16,3	ø26 x M10 x 80
K0162.2160X16	K0162.3160X16	160	16H7	40	20	39	-/5	-/18,3	ø26 x M10 x 80
K0162.2200X18	K0162.3200X18	200	18H7	42	24	45	-/6	-/20,8	ø26 x M10 x 80
K0162.2200X20	K0162.3200X20	200	20H7	42	24	45	-/6	-/22,8	ø26 x M10 x 80
K0162.2250X22	K0162.3250X22	250	22H7	48	28	51	-/6	-/24,8	ø28 x M12 x 90
K0162.2250X26	K0162.3250X26	250	26H7	48	28	51	-/8	-/29,3	ø28 x M12 x 90

KIPP Handwheels 2-spoke, aluminium, flat wheel rim, with revolving cylinder grip

Order No. reamed hole	Order No. reamed hole with slot	D1	D2	D3	L1	L3	B3	T	Revolving cylinder grip
K0162.4080X10	K0162.5080X10	80	10H7	24	16	28	-/3	-/11,4	ø18 x M6 x 40
K0162.4080X12	K0162.5080X12	80	12H7	24	16	28	-/4	-/13,8	ø18 x M6 x 40
K0162.4100X10	K0162.5100X10	100	10H7	26	17	33	-/3	-/11,4	ø18 x M6 x 40
K0162.4100X12	K0162.5100X12	100	12H7	26	17	33	-/4	-/13,8	ø18 x M6 x 40
K0162.4125X12	K0162.5125X12	125	12H7	31	18	33,5	-/4	-/13,8	ø22 x M8 x 56
K0162.4125X14	K0162.5125X14	125	14H7	31	18	33,5	-/5	-/16,3	ø22 x M8 x 56
K0162.4160X14	K0162.5160X14	160	14H7	40	20	39	-/5	-/16,3	ø26 x M10 x 80
K0162.4160X16	K0162.5160X16	160	16H7	40	20	39	-/5	-/18,3	ø26 x M10 x 80
K0162.4200X18	K0162.5200X18	200	18H7	42	24	45	-/6	-/20,8	ø26 x M10 x 80
K0162.4200X20	K0162.5200X20	200	20H7	42	24	45	-/6	-/22,8	ø26 x M10 x 80
K0162.4250X22	K0162.5250X22	250	22H7	48	28	51	-/6	-/24,8	ø31 x M12 x 102
K0162.4250X26	K0162.5250X26	250	26H7	48	28	51	-/8	-/29,3	ø31 x M12 x 102

Handwheels 2-spoke

flat rim, aluminium

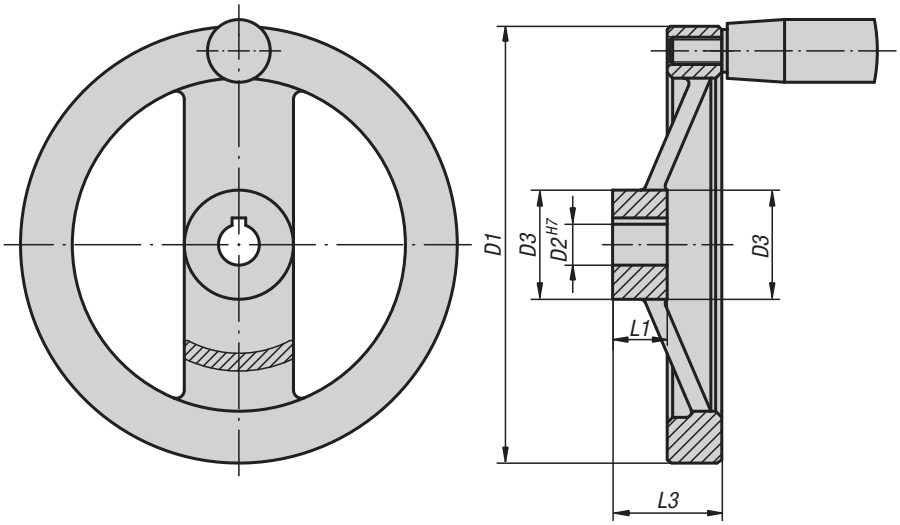

Material:
Handwheels aluminium.
Cylinder grip black thermoset PF 31-DIN 7708, centre pin electro zinc-plated steel.

Version:
Black, powder-coated.
Wheel rim turned.
Radial and axial run-out of rim < IT 12.

Sample order:
K0162.01080X10

On request:
Hubs with square socket.

DIN 6885-1

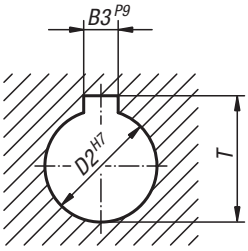

KIPP Handwheels 2-spoke, aluminium, flat wheel rim, without grip

Order No. reamed hole	Order No. reamed hole with slot	D1	D2	D3	L1	L3	B3	T
K0162.01080X10	**K0162.11080X10**	80	10H7	24	16	28	-/3	-/11,4
K0162.01080X12	**K0162.11080X12**	80	12H7	24	16	28	-/4	-/13,8
K0162.01100X10	**K0162.11100X10**	100	10H7	26	17	33	-/3	-/11,4
K0162.01100X12	**K0162.11100X12**	100	12H7	26	17	33	-/4	-/13,8
K0162.01125X12	**K0162.11125X12**	125	12H7	31	18	33,5	-/4	-/13,8
K0162.01125X14	**K0162.11125X14**	125	14H7	31	18	33,5	-/5	-/16,3
K0162.01160X14	**K0162.11160X14**	160	14H7	40	20	39	-/5	-/16,3
K0162.01160X16	**K0162.11160X16**	160	16H7	40	20	39	-/5	-/18,3
K0162.01200X18	**K0162.11200X18**	200	18H7	42	24	45	-/6	-/20,8
K0162.01200X20	**K0162.11200X20**	200	20H7	42	24	45	-/6	-/22,8
K0162.01250X22	**K0162.11250X22**	250	22H7	48	28	51	-/6	-/24,8
K0162.01250X26	**K0162.11250X26**	250	26H7	48	28	51	-/8	-/29,3

Handwheels 2-spoke

flat rim, aluminium

KIPP Handwheels 2-spoke, aluminium, flat wheel rim, with fixed cylinder grip

Order No. reamed hole	Order No. reamed hole with slot	D1	D2	D3	L1	L3	B3	T	Fixed cylinder grip
K0162.21080X10	K0162.31080X10	80	10H7	24	16	28	-/3	-/11,4	ø18 x M6 x 40
K0162.21080X12	K0162.31080X12	80	12H7	24	16	28	-/4	-/13,8	ø18 x M6 x 40
K0162.21100X10	K0162.31100X10	100	10H7	26	17	33	-/3	-/11,4	ø18 x M6 x 40
K0162.21100X12	K0162.31100X12	100	12H7	26	17	33	-/4	-/13,8	ø18 x M6 x 40
K0162.21125X12	K0162.31125X12	125	12H7	31	18	33,5	-/4	-/13,8	ø21 x M8 x 50
K0162.21125X14	K0162.31125X14	125	14H7	31	18	33,5	-/5	-/16,3	ø21 x M8 x 50
K0162.21160X14	K0162.31160X14	160	14H7	40	20	39	-/5	-/16,3	ø26 x M10 x 80
K0162.21160X16	K0162.31160X16	160	16H7	40	20	39	-/5	-/18,3	ø26 x M10 x 80
K0162.21200X18	K0162.31200X18	200	18H7	42	24	45	-/6	-/20,8	ø26 x M10 x 80
K0162.21200X20	K0162.31200X20	200	20H7	42	24	45	-/6	-/22,8	ø26 x M10 x 80
K0162.21250X22	K0162.31250X22	250	22H7	48	28	51	-/6	-/24,8	ø28 x M12 x 90
K0162.21250X26	K0162.31250X26	250	26H7	48	28	51	-/8	-/29,3	ø28 x M12 x 90

KIPP Handwheels 2-spoke, aluminium, flat wheel rim, with revolving cylinder grip

Order No. reamed hole	Order No. reamed hole with slot	D1	D2	D3	L1	L3	B3	T	Revolving cylinder grip
K0162.41080X10	K0162.51080X10	80	10H7	24	16	28	-/3	-/11,4	ø18 x M6 x 40
K0162.41080X12	K0162.51080X12	80	12H7	24	16	28	-/4	-/13,8	ø18 x M6 x 40
K0162.41100X10	K0162.51100X10	100	10H7	26	17	33	-/3	-/11,4	ø18 x M6 x 40
K0162.41100X12	K0162.51100X12	100	12H7	26	17	33	-/4	-/13,8	ø18 x M6 x 40
K0162.41125X12	K0162.51125X12	125	12H7	31	18	33,5	-/4	-/13,8	ø22 x M8 x 56
K0162.41125X14	K0162.51125X14	125	14H7	31	18	33,5	-/5	-/16,3	ø22 x M8 x 56
K0162.41160X14	K0162.51160X14	160	14H7	40	20	39	-/5	-/16,3	ø26 x M10 x 80
K0162.41160X16	K0162.51160X16	160	16H7	40	20	39	-/5	-/18,3	ø26 x M10 x 80
K0162.41200X18	K0162.51200X18	200	18H7	42	24	45	-/6	-/20,8	ø26 x M10 x 80
K0162.41200X20	K0162.51200X20	200	20H7	42	24	45	-/6	-/22,8	ø26 x M10 x 80
K0162.41250X22	K0162.51250X22	250	22H7	48	28	51	-/6	-/24,8	ø31 x M12 x 102
K0162.41250X26	K0162.51250X26	250	26H7	48	28	51	-/8	-/29,3	ø31 x M12 x 102

Handwheels

DIN 950 grey cast iron

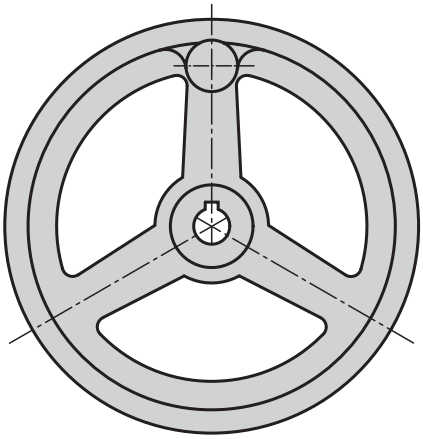

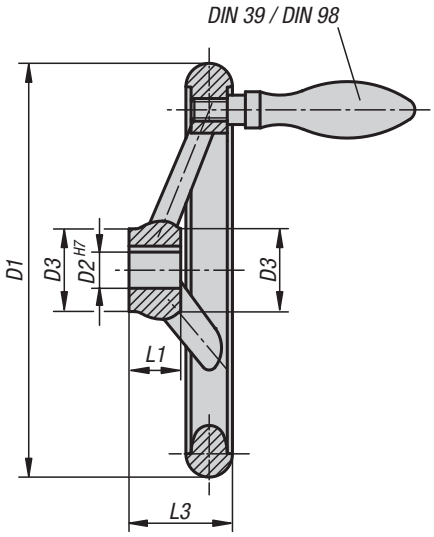

Material:
Handwheel, grey cast iron.
Grip steel.

Version:
Wheel rim turned and polished.
Radial and axial run-out of rim < IT 12.

Sample order:
K0671.4080X10

On request:
Hubs with square socket or powder-coated handwheels.

DIN 6885-1

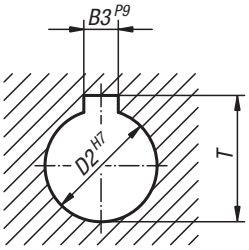

KIPP Handwheels DIN 950 grey cast iron, without grip

Order No. reamed hole	Order No. reamed hole with slot	D1	D2	D3	L1	L3	B3	T	No.of spokes
K0671.0080X10	K0671.1080X10	80	10H7	25	16	29	-/3	-/11,4	3
K0671.0080X12	K0671.1080X12	80	12H7	25	16	29	-/4	-/13,8	3
K0671.0100X10	K0671.1100X10	100	10H7	26	17	33	-/3	-/11,4	3
K0671.0100X12	K0671.1100X12	100	12H7	26	17	33	-/4	-/13,8	3
K0671.0125X12	K0671.1125X12	125	12H7	33	18	36	-/4	-/13,8	3
K0671.0125X14	K0671.1125X14	125	14H7	33	18	36	-/5	-/16,3	3
K0671.0140X14	K0671.1140X14	140	14H7	33	19	39	-/5	-/16,3	3
K0671.0140X16	K0671.1140X16	140	16H7	33	19	39	-/5	-/18,3	3
K0671.0160X14	K0671.1160X14	160	14H7	37	20	40	-/5	-/16,3	3
K0671.0160X16	K0671.1160X16	160	16H7	37	20	40	-/5	-/18,3	3
K0671.0180X16	K0671.1180X16	180	16H7	36	22	43	-/5	-/18,3	3
K0671.0180X18	K0671.1180X18	180	18H7	36	22	43	-/6	-/20,8	3
K0671.0200X18	K0671.1200X18	200	18H7	38	24	45	-/6	-/20,8	3
K0671.0200X22	K0671.1200X22	200	22H7	38	24	45	-/6	-/24,8	3
K0671.0250X22	K0671.1250X22	250	22H7	46	28	50	-/6	-/24,8	5
K0671.0250X26	K0671.1250X26	250	26H7	46	28	50	-/8	-/29,3	5
K0671.0315X26	K0671.1315X26	315	26H7	54	33	56	-/8	-/29,3	5
K0671.0315X30	K0671.1315X30	315	30H7	54	33	56	-/8	-/33,3	5
K0671.0400X30	K0671.1400X30	400	30H7	68	38	63	-/8	-/33,3	5
K0671.0400X34	K0671.1400X34	400	34H7	68	38	63	-/10	-/37,3	5
K0671.0500X34	K0671.1500X34	500	34H7	79	45	72	-/10	-/37,3	5
K0671.0500X40	K0671.1500X40	500	40H7	79	45	72	-/12	-/43,3	5

Handwheels

DIN 950 grey cast iron

KIPP Handwheels DIN 950 grey cast iron, with fixed grip

Order No. reamed hole	Order No. reamed hole with slot	D1	D2	D3	L1	L3	B3	T	No.of spokes	fixed grip DIN 39 Form E
K0671.2080X10	K0671.3080X10	80	10H7	25	16	29	-/3	-/11,4	3	ø16 x M6 x 50
K0671.2080X12	K0671.3080X12	80	12H7	25	16	29	-/4	-/13,8	3	ø16 x M6 x 50
K0671.2100X10	K0671.3100X10	100	10H7	26	17	33	-/3	-/11,4	3	ø16 x M6 x 50
K0671.2100X12	K0671.3100X12	100	12H7	26	17	33	-/4	-/13,8	3	ø16 x M6 x 50
K0671.2125X12	K0671.3125X12	125	12H7	33	18	36	-/4	-/13,8	3	ø20 x M8 x 64
K0671.2125X14	K0671.3125X14	125	14H7	33	18	36	-/5	-/16,3	3	ø20 x M8 x 64
K0671.2140X14	K0671.3140X14	140	14H7	33	19	39	-/5	-/16,3	3	ø20 x M8 x 64
K0671.2140X16	K0671.3140X16	140	16H7	33	19	39	-/5	-/18,3	3	ø20 x M8 x 64
K0671.2160X14	K0671.3160X14	160	14H7	37	20	40	-/5	-/16,3	3	ø25 x M10 x 80
K0671.2160X16	K0671.3160X16	160	16H7	37	20	40	-/5	-/18,3	3	ø25 x M10 x 80
K0671.2180X16	K0671.3180X16	180	16H7	36	22	43	-/5	-/18,3	3	ø25 x M10 x 80
K0671.2180X18	K0671.3180X18	180	18H7	36	22	43	-/6	-/20,8	3	ø25 x M10 x 80
K0671.2200X18	K0671.3200X18	200	18H7	38	24	45	-/6	-/20,8	3	ø25 x M10 x 80
K0671.2200X22	K0671.3200X22	200	22H7	38	24	45	-/6	-/24,8	3	ø25 x M10 x 80
K0671.2250X22	K0671.3250X22	250	22H7	46	28	50	-/6	-/24,8	5	ø32 x M12 x 100
K0671.2250X26	K0671.3250X26	250	26H7	46	28	50	-/8	-/29,3	5	ø32 x M12 x 100
K0671.2315X26	K0671.3315X26	315	26H7	54	33	56	-/8	-/29,3	5	ø32 x M12 x 100
K0671.2315X30	K0671.3315X30	315	30H7	54	33	56	-/8	-/33,3	5	ø32 x M12 x 100
K0671.2400X30	K0671.3400X30	400	30H7	68	38	63	-/8	-/33,3	5	ø36 x M16 x 112
K0671.2400X34	K0671.3400X34	400	34H7	68	38	63	-/10	-/37,3	5	ø36 x M16 x 112
K0671.2500X34	K0671.3500X34	500	34H7	79	45	72	-/10	-/37,3	5	ø36 x M16 x 112
K0671.2500X40	K0671.3500X40	500	40H7	79	45	72	-/12	-/43,3	5	ø36 x M16 x 112

KIPP Handwheels DIN 950 grey cast iron, with revolving grip

Order No. reamed hole	Order No. reamed hole with slot	D1	D2	D3	L1	L3	B3	T	No.of spokes	revolving grip DIN 98 Form E
K0671.4080X10	K0671.5080X10	80	10H7	25	16	29	-/3	-/11,4	3	ø16 x M6 x 54.5
K0671.4080X12	K0671.5080X12	80	12H7	25	16	29	-/4	-/13,8	3	ø16 x M6 x 54.5
K0671.4100X10	K0671.5100X10	100	10H7	26	17	33	-/3	-/11,4	3	ø16 x M6 x 54.5
K0671.4100X12	K0671.5100X12	100	12H7	26	17	33	-/4	-/13,8	3	ø16 x M6 x 54.5
K0671.4125X12	K0671.5125X12	125	12H7	33	18	36	-/4	-/13,8	3	ø20 x M8 x 67
K0671.4125X14	K0671.5125X14	125	14H7	33	18	36	-/5	-/16,3	3	ø20 x M8 x 67
K0671.4140X14	K0671.5140X14	140	14H7	33	19	39	-/5	-/16,3	3	ø20 x M8 x 67
K0671.4140X16	K0671.5140X16	140	16H7	33	19	39	-/5	-/18,3	3	ø20 x M8 x 67
K0671.4160X14	K0671.5160X14	160	14H7	37	20	40	-/5	-/16,3	3	ø25 x M10 x 83
K0671.4160X16	K0671.5160X16	160	16H7	37	20	40	-/5	-/18,3	3	ø25 x M10 x 83
K0671.4180X16	K0671.5180X16	180	16H7	36	22	43	-/5	-/18,3	3	ø25 x M10 x 83
K0671.4180X18	K0671.5180X18	180	18H7	36	22	43	-/6	-/20,8	3	ø25 x M10 x 83
K0671.4200X18	K0671.5200X18	200	18H7	38	24	45	-/6	-/20,8	3	ø25 x M10 x 83
K0671.4200X22	K0671.5200X22	200	22H7	38	24	45	-/6	-/24,8	3	ø25 x M10 x 83
K0671.4250X22	K0671.5250X22	250	22H7	46	28	50	-/6	-/24,8	5	ø32 x M12 x 105,5
K0671.4250X26	K0671.5250X26	250	26H7	46	28	50	-/8	-/29,3	5	ø32 x M12 x 105,5
K0671.4315X26	K0671.5315X26	315	26H7	54	33	56	-/8	-/29,3	5	ø32 x M12 x 105,5
K0671.4315X30	K0671.5315X30	315	30H7	54	33	56	-/8	-/33,3	5	ø32 x M12 x 105,5
K0671.4400X30	K0671.5400X30	400	30H7	68	38	63	-/8	-/33,3	5	ø36 x M16 x 117
K0671.4400X34	K0671.5400X34	400	34H7	68	38	63	-/10	-/37,3	5	ø36 x M16 x 117
K0671.4500X34	K0671.5500X34	500	34H7	79	45	72	-/10	-/37,3	5	ø36 x M16 x 117
K0671.4500X40	K0671.5500X40	500	40H7	79	45	72	-/12	-/43,3	5	ø36 x M16 x 117

Handwheels

DIN 950, aluminium

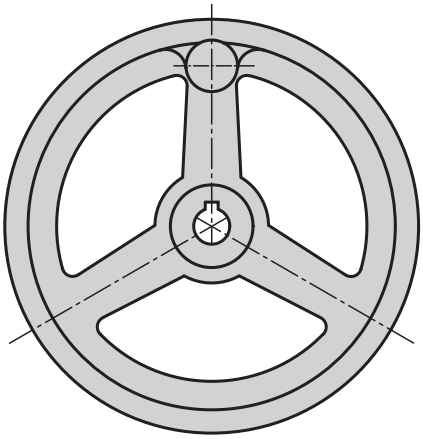

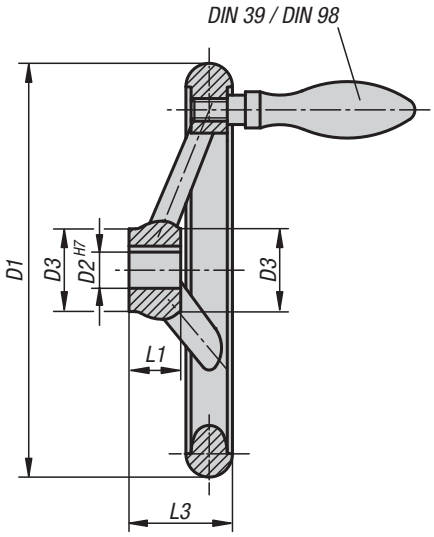

Material:
Handwheel aluminium.
Fixed grip aluminium, centre pin black oxidised steel.
Revolving grip aluminium, centre pin trivalent blue passivated steel.

Version:
Wheel rim turned and polished.
Radial and axial run-out of rim < IT 12.

Sample order:
K0160.4080X10

On request:
Hubs with square socket or powder-coated handwheels.

DIN 6885-1

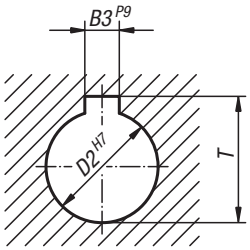

KIPP Handwheels DIN 950 aluminium, without grip

Order No. reamed hole	Order No. reamed hole with slot	D1	D2	D3	L1	L3	B3	T	No.of spokes
K0160.0080X10	K0160.1080X10	80	10H7	25	16	29	-/3	-/11,4	3
K0160.0080X12	K0160.1080X12	80	12H7	25	16	29	-/4	-/13,8	3
K0160.0100X10	K0160.1100X10	100	10H7	29	17	33	-/3	-/11,4	3
K0160.0100X12	K0160.1100X12	100	12H7	29	17	33	-/4	-/13,8	3
K0160.0125X12	K0160.1125X12	125	12H7	31	18	36	-/4	-/13,8	3
K0160.0125X14	K0160.1125X14	125	14H7	31	18	36	-/5	-/16,3	3
K0160.0140X14	K0160.1140X14	140	14H7	36	19	39	-/5	-/16,3	3
K0160.0140X16	K0160.1140X16	140	16H7	36	19	39	-/5	-/18,3	3
K0160.0160X14	K0160.1160X14	160	14H7	36	20	40	-/5	-/16,3	3
K0160.0160X16	K0160.1160X16	160	16H7	36	20	40	-/5	-/18,3	3
K0160.0180X16	K0160.1180X16	180	16H7	37	22	43	-/5	-/18,3	3
K0160.0180X18	K0160.1180X18	180	18H7	37	22	43	-/6	-/20,8	3
K0160.0200X18	K0160.1200X18	200	18H7	43	24	45	-/6	-/20,8	3
K0160.0200X22	K0160.1200X22	200	22H7	43	24	45	-/6	-/24,8	3
K0160.0250X22	K0160.1250X22	250	22H7	49	28	50	-/6	-/24,8	5
K0160.0250X26	K0160.1250X26	250	26H7	49	28	50	-/8	-/29,3	5
K0160.0315X26	K0160.1315X26	315	26H7	54	33	56	-/8	-/29,3	5
K0160.0315X30	K0160.1315X30	315	30H7	54	33	56	-/8	-/33,3	5
K0160.0400X30	K0160.1400X30	400	30H7	65	38	63	-/8	-/33,3	5
K0160.0400X34	K0160.1400X34	400	34H7	65	38	63	-/10	-/37,3	5
K0160.0500X34	K0160.1500X34	500	34H7	79	45	72	-/10	-/37,3	5
K0160.0500X40	K0160.1500X40	500	40H7	79	45	72	-/12	-/43,3	5

Handwheels

DIN 950, aluminium

KIPP Handwheels DIN 950 aluminium, with fixed grip

Order No. reamed hole	Order No. reamed hole with slot	D1	D2	D3	L1	L3	B3	T	No.of spokes	fixed grip DIN 39 Form E
K0160.2080X10	K0160.3080X10	80	10H7	25	16	29	-/3	-/11,4	3	ø16 x M6 x 50
K0160.2080X12	K0160.3080X12	80	12H7	25	16	29	-/4	-/13,8	3	ø16 x M6 x 50
K0160.2100X10	K0160.3100X10	100	10H7	29	17	33	-/3	-/11,4	3	ø16 x M6 x 50
K0160.2100X12	K0160.3100X12	100	12H7	29	17	33	-/4	-/13,8	3	ø16 x M6 x 50
K0160.2125X12	K0160.3125X12	125	12H7	31	18	36	-/4	-/13,8	3	ø20 x M8 x 64
K0160.2125X14	K0160.3125X14	125	14H7	31	18	36	-/5	-/16,3	3	ø20 x M8 x 64
K0160.2140X14	K0160.3140X14	140	14H7	36	19	39	-/5	-/16,3	3	ø20 x M8 x 64
K0160.2140X16	K0160.3140X16	140	16H7	36	19	39	-/5	-/18,3	3	ø20 x M8 x 64
K0160.2160X14	K0160.3160X14	160	14H7	36	20	40	-/5	-/16,3	3	ø25 x M10 x 80
K0160.2160X16	K0160.3160X16	160	16H7	36	20	40	-/5	-/18,3	3	ø25 x M10 x 80
K0160.2180X16	K0160.3180X16	180	16H7	37	22	43	-/5	-/18,3	3	ø25 x M10 x 80
K0160.2180X18	K0160.3180X18	180	18H7	37	22	43	-/6	-/20,8	3	ø25 x M10 x 80
K0160.2200X18	K0160.3200X18	200	18H7	43	24	45	-/6	-/20,8	3	ø25 x M10 x 80
K0160.2200X22	K0160.3200X22	200	22H7	43	24	45	-/6	-/24,8	3	ø25 x M10 x 80
K0160.2250X22	K0160.3250X22	250	22H7	49	28	50	-/6	-/24,8	5	ø32 x M12 x 100
K0160.2250X26	K0160.3250X26	250	26H7	49	28	50	-/8	-/29,3	5	ø32 x M12 x 100
K0160.2315X26	K0160.3315X26	315	26H7	54	33	56	-/8	-/29,3	5	ø32 x M12 x 100
K0160.2315X30	K0160.3315X30	315	30H7	54	33	56	-/8	-/33,3	5	ø32 x M12 x 100
K0160.2400X30	K0160.3400X30	400	30H7	65	38	63	-/8	-/33,3	5	ø36 x M16 x 112
K0160.2400X34	K0160.3400X34	400	34H7	65	38	63	-/10	-/37,3	5	ø36 x M16 x 112
K0160.2500X34	K0160.3500X34	500	34H7	79	45	72	-/10	-/37,3	5	ø36 x M16 x 112
K0160.2500X40	K0160.3500X40	500	40H7	79	45	72	-/12	-/43,3	5	ø36 x M16 x 112

KIPP Handwheels DIN 950 aluminium, with revolving grip

Order No. reamed hole	Order No. reamed hole with slot	D1	D2	D3	L1	L3	B3	T	No.of spokes	revolving grip DIN 98 Form E
K0160.4080X10	K0160.5080X10	80	10H7	25	16	29	-/3	-/11,4	3	ø16 x M6 x 54.5
K0160.4080X12	K0160.5080X12	80	12H7	25	16	29	-/4	-/13,8	3	ø16 x M6 x 54.5
K0160.4100X10	K0160.5100X10	100	10H7	29	17	33	-/3	-/11,4	3	ø16 x M6 x 54.5
K0160.4100X12	K0160.5100X12	100	12H7	29	17	33	-/4	-/13,8	3	ø16 x M6 x 54.5
K0160.4125X12	K0160.5125X12	125	12H7	31	18	36	-/4	-/13,8	3	ø20 x M8 x 67
K0160.4125X14	K0160.5125X14	125	14H7	31	18	36	-/5	-/16,3	3	ø20 x M8 x 67
K0160.4140X14	K0160.5140X14	140	14H7	36	19	39	-/5	-/16,3	3	ø20 x M8 x 67
K0160.4140X16	K0160.5140X16	140	16H7	36	19	39	-/5	-/18,3	3	ø20 x M8 x 67
K0160.4160X14	K0160.5160X14	160	14H7	36	20	40	-/5	-/16,3	3	ø25 x M10 x 83
K0160.4160X16	K0160.5160X16	160	16H7	36	20	40	-/5	-/18,3	3	ø25 x M10 x 83
K0160.4180X16	K0160.5180X16	180	16H7	37	22	43	-/5	-/18,3	3	ø25 x M10 x 83
K0160.4180X18	K0160.5180X18	180	18H7	37	22	43	-/6	-/20,8	3	ø25 x M10 x 83
K0160.4200X18	K0160.5200X18	200	18H7	43	24	45	-/6	-/20,8	3	ø25 x M10 x 83
K0160.4200X22	K0160.5200X22	200	22H7	43	24	45	-/6	-/24,8	3	ø25 x M10 x 83
K0160.4250X22	K0160.5250X22	250	22H7	49	28	50	-/6	-/24,8	5	ø32 x M12 x 105,5
K0160.4250X26	K0160.5250X26	250	26H7	49	28	50	-/8	-/29,3	5	ø32 x M12 x 105,5
K0160.4315X26	K0160.5315X26	315	26H7	54	33	56	-/8	-/29,3	5	ø32 x M12 x 105,5
K0160.4315X30	K0160.5315X30	315	30H7	54	33	56	-/8	-/33,3	5	ø32 x M12 x 105,5
K0160.4400X30	K0160.5400X30	400	30H7	65	38	63	-/8	-/33,3	5	ø36 x M16 x 117
K0160.4400X34	K0160.5400X34	400	34H7	65	38	63	-/10	-/37,3	5	ø36 x M16 x 117
K0160.4500X34	K0160.5500X34	500	34H7	79	45	72	-/10	-/37,3	5	ø36 x M16 x 117
K0160.4500X40	K0160.5500X40	500	40H7	79	45	72	-/12	-/43,3	5	ø36 x M16 x 117

Handwheels

DIN 950, stainless steel

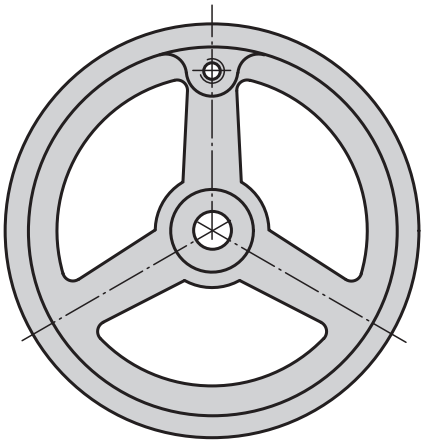

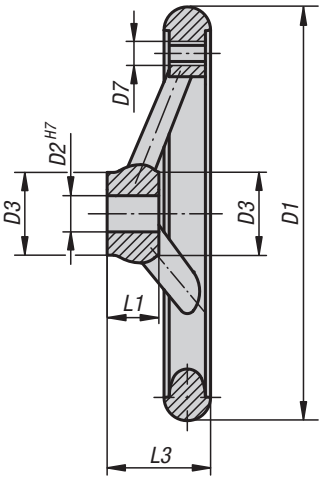

Material:
Stainless steel 1.4401.

Version:
Wheel rim turned
and polished

Sample order:
K1208.0100X10

DIN 6885-1

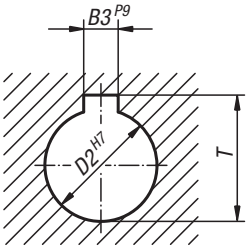

KIPP Handwheels DIN 950, stainless steel

Order No.	Version 1	D1	D2	D3	D7	L1	L3	B3	T	No. of spokes
K1208.0100X10	reamed hole	100	10H7	26	M6	17	33	-	-	3
K1208.0125X12	reamed hole	125	12H7	28	M8	18	36	-	-	3
K1208.0160X16	reamed hole	160	16H7	32	M10	20	40	-	-	3
K1208.0200X18	reamed hole	200	18H7	38	M10	24	45	-	-	3
K1208.1100X10	reamed hole with slot	100	10H7	26	M6	17	33	3	11,4	3
K1208.1125X12	reamed hole with slot	125	12H7	28	M8	18	36	4	13,8	3
K1208.1160X16	reamed hole with slot	160	16H7	32	M10	20	40	5	18,3	3
K1208.1200X18	reamed hole with slot	200	18H7	38	M10	24	45	6	20,8	3

Notes

Handwheels disc

aluminium

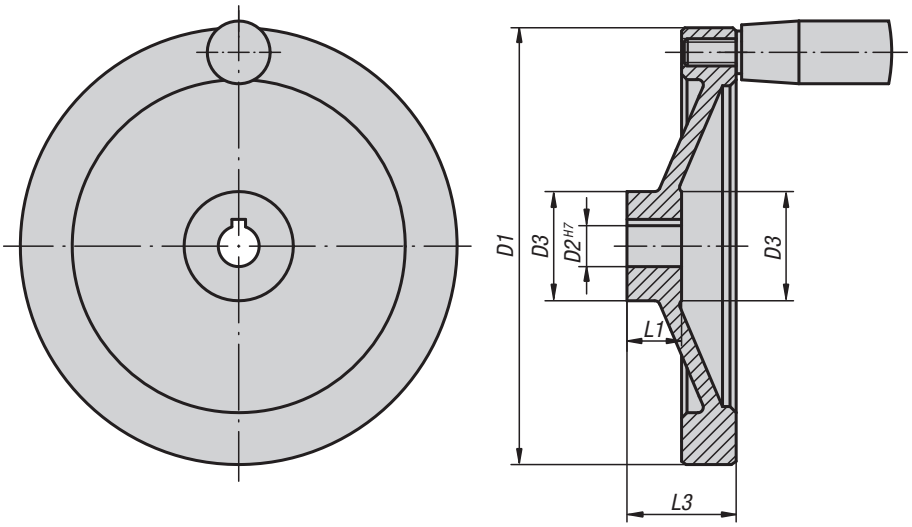

Material:
Disc handwheel aluminium.
Cylinder grip black thermoset PF 31-DIN 7708.
Hub electro zinc-plated steel.

Version:
Wheel rim turned and polished.
Radial and axial run-out of rim < IT 12.

Sample order:
K0161.4080X10

On request:
Hubs with square socket or powder-coated handwheels.

DIN 6885-1

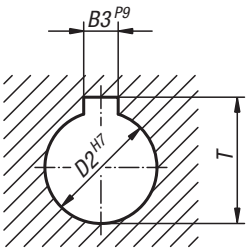

KIPP Handwheels disc, aluminium, without grip

Order No. reamed hole	Order No. reamed hole with slot	D1	D2	D3	L1	L3	B3	T
K0161.0080X10	**K0161.1080X10**	80	10H7	26	16	31	-/3	-/11,4
K0161.0080X12	**K0161.1080X12**	80	12H7	26	16	31	-/4	-/13,8
K0161.0100X10	**K0161.1100X10**	100	10H7	31	17	34	-/3	-/11,4
K0161.0100X12	**K0161.1100X12**	100	12H7	31	17	34	-/4	-/13,8
K0161.0125X12	**K0161.1125X12**	125	12H7	30	18	37	-/4	-/13,8
K0161.0125X14	**K0161.1125X14**	125	14H7	30	18	37	-/5	-/16,3
K0161.0140X14	**K0161.1140X14**	140	14H7	34	19	34	-/5	-/16,3
K0161.0140X15	**K0161.1140X15**	140	15H7	34	19	34	-/5	-/17,3
K0161.0160X15	**K0161.1160X15**	160	15H7	40	20	40	-/5	-/17,3
K0161.0160X16	**K0161.1160X16**	160	16H7	40	20	40	-/5	-/18,3
K0161.0200X18	**K0161.1200X18**	200	18H7	50	24	46	-/6	-/20,8
K0161.0200X20	**K0161.1200X20**	200	20H7	50	24	46	-/6	-/22,8
K0161.0250X22	**K0161.1250X22**	250	22H7	50	28	49	-/6	-/24,8
K0161.0250X24	**K0161.1250X24**	250	24H7	50	28	49	-/8	-/27,3

Handwheels disc

aluminium

KIPP Handwheels disc, aluminium, with fixed cylinder grip

Order No. reamed hole	Order No. reamed hole with slot	D1	D2	D3	L1	L3	B3	T	Fixed cylinder grip
K0161.2080X10	**K0161.3080X10**	80	10H7	26	16	31	-/3	-/11,4	ø18 x M6 x 40
K0161.2080X12	**K0161.3080X12**	80	12H7	26	16	31	-/4	-/13,8	ø18 x M6 x 40
K0161.2100X10	**K0161.3100X10**	100	10H7	31	17	34	-/3	-/11,4	ø18 x M6 x 40
K0161.2100X12	**K0161.3100X12**	100	12H7	31	17	34	-/4	-/13,8	ø18 x M6 x 40
K0161.2125X12	**K0161.3125X12**	125	12H7	30	18	37	-/4	-/13,8	ø21 x M8 x 50
K0161.2125X14	**K0161.3125X14**	125	14H7	30	18	37	-/5	-/16,3	ø21 x M8 x 50
K0161.2140X14	**K0161.3140X14**	140	14H7	34	19	34	-/5	-/16,3	ø21 x M8 x 50
K0161.2140X15	**K0161.3140X15**	140	15H7	34	19	34	-/5	-/17,3	ø21 x M8 x 50
K0161.2160X15	**K0161.3160X15**	160	15H7	40	20	40	-/5	-/17,3	ø26 x M10 x 80
K0161.2160X16	**K0161.3160X16**	160	16H7	40	20	40	-/5	-/18,3	ø26 x M10 x 80
K0161.2200X18	**K0161.3200X18**	200	18H7	50	24	46	-/6	-/20,8	ø26 x M10 x 80
K0161.2200X20	**K0161.3200X20**	200	20H7	50	24	46	-/6	-/22,8	ø26 x M10 x 80
K0161.2250X22	**K0161.3250X22**	250	22H7	50	28	49	-/6	-/24,8	ø28 x M12 x 90
K0161.2250X24	**K0161.3250X24**	250	24H7	50	28	49	-/8	-/27,3	ø28 x M12 x 90

KIPP Handwheels disc, aluminium, with revolving cylinder grip

Order No. reamed hole	Order No. reamed hole with slot	D1	D2	D3	L1	L3	B3	T	Revolving cylinder grip
K0161.4080X10	**K0161.5080X10**	80	10H7	26	16	31	-/3	-/11,4	ø18 x M6 x 40
K0161.4080X12	**K0161.5080X12**	80	12H7	26	16	31	-/4	-/13,8	ø18 x M6 x 40
K0161.4100X10	**K0161.5100X10**	100	10H7	31	17	34	-/3	-/11,4	ø18 x M6 x 40
K0161.4100X12	**K0161.5100X12**	100	12H7	31	17	34	-/4	-/13,8	ø18 x M6 x 40
K0161.4125X12	**K0161.5125X12**	125	12H7	30	18	37	-/4	-/13,8	ø22 x M8 x 56
K0161.4125X14	**K0161.5125X14**	125	14H7	30	18	37	-/5	-/16,3	ø22 x M8 x 56
K0161.4140X14	**K0161.5140X14**	140	14H7	34	19	34	-/5	-/16,3	ø22 x M8 x 56
K0161.4140X15	**K0161.5140X15**	140	15H7	34	19	34	-/5	-/17,3	ø22 x M8 x 56
K0161.4160X15	**K0161.5160X15**	160	15H7	40	20	40	-/5	-/17,3	ø26 x M10 x 80
K0161.4160X16	**K0161.5160X16**	160	16H7	40	20	40	-/5	-/18,3	ø26 x M10 x 80
K0161.4200X18	**K0161.5200X18**	200	18H7	50	24	46	-/6	-/20,8	ø26 x M10 x 80
K0161.4200X20	**K0161.5200X20**	200	20H7	50	24	46	-/6	-/22,8	ø26 x M10 x 80
K0161.4250X22	**K0161.5250X22**	250	22H7	50	28	49	-/6	-/24,8	ø31 x M12 x 102
K0161.4250X24	**K0161.5250X24**	250	24H7	50	28	49	-/8	-/27,3	ø31 x M12 x 102

Handwheels disc

aluminium

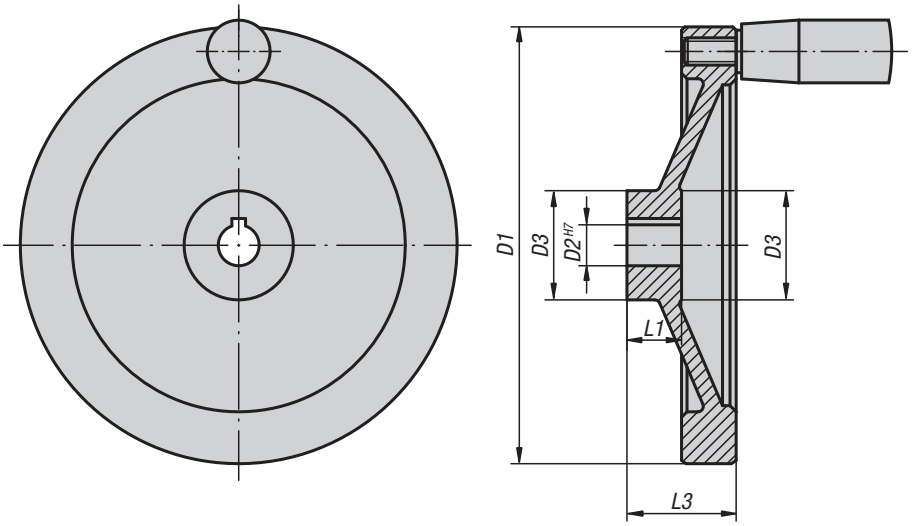

Material:
Disc handwheel aluminium.
Cylinder grip black thermoset PF 31-DIN 7708.
Hub electro zinc-plated steel.

Version:
Black, powder-coated.
Wheel rim turned.
Radial and axial run-out of rim < IT 12.

Sample order:
K0161.01080X10

On request:
Hubs with square socket.

DIN 6885-1

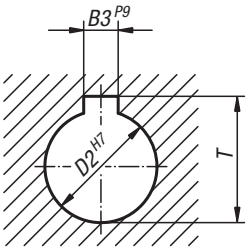

KIPP Handwheels disc, aluminium, without grip

Order No. reamed hole	Order No. reamed hole with slot	D1	D2	D3	L1	L3	B3	T
K0161.01080X10	**K0161.11080X10**	80	10H7	26	16	31	-/3	-/11,4
K0161.01080X12	**K0161.11080X12**	80	12H7	26	16	31	-/4	-/13,8
K0161.01100X10	**K0161.11100X10**	100	10H7	31	17	34	-/3	-/11,4
K0161.01100X12	**K0161.11100X12**	100	12H7	31	17	34	-/4	-/13,8
K0161.01125X12	**K0161.11125X12**	125	12H7	30	18	37	-/4	-/13,8
K0161.01125X14	**K0161.11125X14**	125	14H7	30	18	37	-/5	-/16,3
K0161.01140X14	**K0161.11140X14**	140	14H7	34	19	34	-/5	-/16,3
K0161.01140X15	**K0161.11140X15**	140	15H7	34	19	34	-/5	-/17,3
K0161.01160X15	**K0161.11160X15**	160	15H7	40	20	40	-/5	-/17,3
K0161.01160X16	**K0161.11160X16**	160	16H7	40	20	40	-/5	-/18,3
K0161.01200X18	**K0161.11200X18**	200	18H7	50	24	46	-/6	-/20,8
K0161.01200X20	**K0161.11200X20**	200	20H7	50	24	46	-/6	-/22,8
K0161.01250X22	**K0161.11250X22**	250	22H7	50	28	49	-/6	-/24,8
K0161.01250X24	**K0161.11250X24**	250	24H7	50	28	49	-/8	-/27,3

Handwheels disc

aluminium

KIPP Handwheels disc, aluminium, with fixed cylinder grip

Order No. reamed hole	Order No. reamed hole with slot	D1	D2	D3	L1	L3	B3	T	Fixed cylinder grip
K0161.21080X10	K0161.31080X10	80	10H7	26	16	31	-/3	-/11,4	ø18 x M6 x 40
K0161.21080X12	K0161.31080X12	80	12H7	26	16	31	-/4	-/13,8	ø18 x M6 x 40
K0161.21100X10	K0161.31100X10	100	10H7	31	17	34	-/3	-/11,4	ø18 x M6 x 40
K0161.21100X12	K0161.31100X12	100	12H7	31	17	34	-/4	-/13,8	ø18 x M6 x 40
K0161.21125X12	K0161.31125X12	125	12H7	30	18	37	-/4	-/13,8	ø21 x M8 x 50
K0161.21125X14	K0161.31125X14	125	14H7	30	18	37	-/5	-/16,3	ø21 x M8 x 50
K0161.21140X14	K0161.31140X14	140	14H7	34	19	34	-/5	-/16,3	ø21 x M8 x 50
K0161.21140X15	K0161.31140X15	140	15H7	34	19	34	-/5	-/17,3	ø21 x M8 x 50
K0161.21160X15	K0161.31160X15	160	15H7	40	20	40	-/5	-/17,3	ø26 x M10 x 80
K0161.21160X16	K0161.31160X16	160	16H7	40	20	40	-/5	-/18,3	ø26 x M10 x 80
K0161.21200X18	K0161.31200X18	200	18H7	50	24	46	-/6	-/20,8	ø26 x M10 x 80
K0161.21200X20	K0161.31200X20	200	20H7	50	24	46	-/6	-/22,8	ø26 x M10 x 80
K0161.21250X22	K0161.31250X22	250	22H7	50	28	49	-/6	-/24,8	ø28 x M12 x 90
K0161.21250X24	K0161.31250X24	250	24H7	50	28	49	-/8	-/27,3	ø28 x M12 x 90

KIPP Handwheels disc, aluminium, with revolving cylinder grip

Order No. reamed hole	Order No. reamed hole with slot	D1	D2	D3	L1	L3	B3	T	Revolving cylinder grip
K0161.41080X10	K0161.51080X10	80	10H7	26	16	31	-/3	-/11,4	ø18 x M6 x 40
K0161.41080X12	K0161.51080X12	80	12H7	26	16	31	-/4	-/13,8	ø18 x M6 x 40
K0161.41100X10	K0161.51100X10	100	10H7	31	17	34	-/3	-/11,4	ø18 x M6 x 40
K0161.41100X12	K0161.51100X12	100	12H7	31	17	34	-/4	-/13,8	ø18 x M6 x 40
K0161.41125X12	K0161.51125X12	125	12H7	30	18	37	-/4	-/13,8	ø22 x M8 x 56
K0161.41125X14	K0161.51125X14	125	14H7	30	18	37	-/5	-/16,3	ø22 x M8 x 56
K0161.41140X14	K0161.51140X14	140	14H7	34	19	34	-/5	-/16,3	ø22 x M8 x 56
K0161.41140X15	K0161.51140X15	140	15H7	34	19	34	-/5	-/17,3	ø22 x M8 x 56
K0161.41160X15	K0161.51160X15	160	15H7	40	20	40	-/5	-/17,3	ø26 x M10 x 80
K0161.41160X16	K0161.51160X16	160	16H7	40	20	40	-/5	-/18,3	ø26 x M10 x 80
K0161.41200X18	K0161.51200X18	200	18H7	50	24	46	-/6	-/20,8	ø26 x M10 x 80
K0161.41200X20	K0161.51200X20	200	20H7	50	24	46	-/6	-/22,8	ø26 x M10 x 80
K0161.41250X22	K0161.51250X22	250	22H7	50	28	49	-/6	-/24,8	ø31 x M12 x 102
K0161.41250X24	K0161.51250X24	250	24H7	50	28	49	-/8	-/27,3	ø31 x M12 x 102

Handwheels disc

similar to DIN 950, aluminium

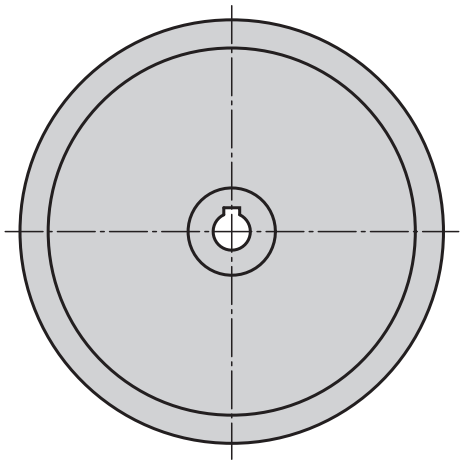

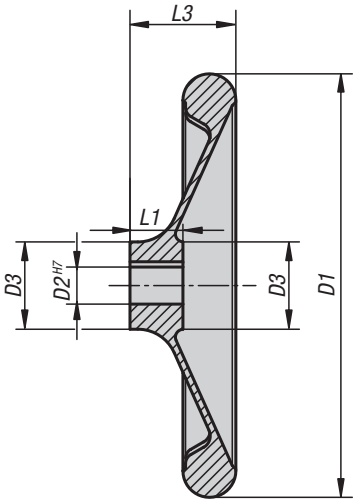

Material:
Handwheel aluminium.

Version:
Wheel rim turned and polished.
Radial and axial run-out of rim < IT 12.

Sample order:
K0163.0080X10

On request:
Hubs with square socket or powder-coated handwheels.

DIN 6885-1

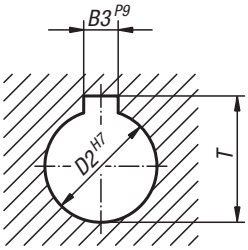

KIPP Handwheels disc, similar to DIN 950, aluminium

Order No. reamed hole	Order No. reamed hole with slot	D1	D2	D3	L1	L3	B3	T
K0163.0080X10	**K0163.1080X10**	80	10H7	25	16	30	-/3	-/11,4
K0163.0080X12	**K0163.1080X12**	80	12H7	25	16	30	-/4	-/13,8
K0163.0100X10	**K0163.1100X10**	100	10H7	28	17	31	-/3	-/11,4
K0163.0100X12	**K0163.1100X12**	100	12H7	28	17	31	-/4	-/13,8
K0163.0120X12	**K0163.1120X12**	120	12H7	27	18	30	-/4	-/13,8
K0163.0120X14	**K0163.1120X14**	120	14H7	27	18	30	-/5	-/16,3
K0163.0160X14	**K0163.1160X14**	160	14H7	34	20	40	-/5	-/16,3
K0163.0160X16	**K0163.1160X16**	160	16H7	34	20	40	-/5	-/18,3
K0163.0200X18	**K0163.1200X18**	200	18H7	40	24	44	-/6	-/20,8
K0163.0200X22	**K0163.1200X22**	200	22H7	40	24	44	-/6	-/24,8
K0163.0250X22	**K0163.1250X22**	250	22H7	49	28	61	-/6	-/24,8
K0163.0250X26	**K0163.1250X26**	250	26H7	49	28	61	-/8	-/29,3
K0163.0280X24	**K0163.1280X24**	280	24H7	51	30	38	-/8	-/27,3
K0163.0280X28	**K0163.1280X28**	280	28H7	51	30	38	-/8	-/31,3
K0163.0360X28	**K0163.1360X28**	360	28H7	63	35	73	-/8	-/31,3
K0163.0360X32	**K0163.1360X32**	360	32H7	63	35	73	-/10	-/35,3

Handwheels disc stainless steel

with revolving grip

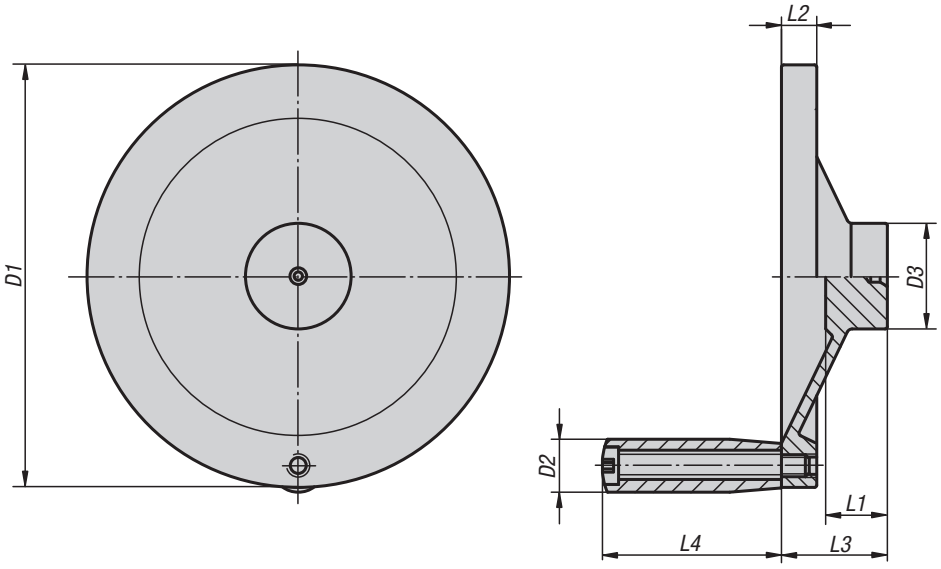

Material:
Stainless steel 1.4301.

Version:
Turned, bright.
Hub is centre bored.

Sample order:
K1307.4076X00

On request:
Stainless steel 1.4401.
Stainless steel 1.4404.
Stainless steel 1.4571.

KIPP Handwheels disc stainless steel, with revolving grip

Order No.	D1	D2	D3	L1	L2	L3	L4
K1307.4076X00	76,2	9,91	22,1	17,02	6,1	27,9	37,9
K1307.4101X00	101,6	11,94	25,9	18,03	7,87	31,7	39,88
K1307.4152X00	152,4	19,05	38,1	22,1	12,7	38,1	63,5
K1307.4203X00	203,2	22,1	45,7	24,13	14,22	45,7	76,2
K1307.4254X00	254	22,1	50,8	26,67	15,75	50,8	76,2

Handwheels disc

with revolving grip

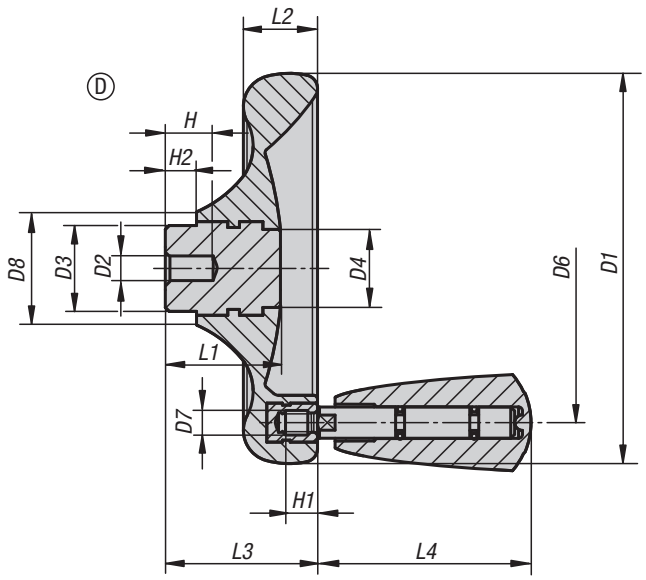

Material:
Thermoset PF 31, black.
Hubs and steel parts of grip nickel-plated steel or bright 1.4305 stainless steel.

Version:
High-gloss polished.

Sample order:
K0164.0125X08

Note:
The handwheel is supplied with the grip loose.

On request:
Other reamed hole sizes.

Drawing reference:
Form D: pilot hole
Form E: reamed hole

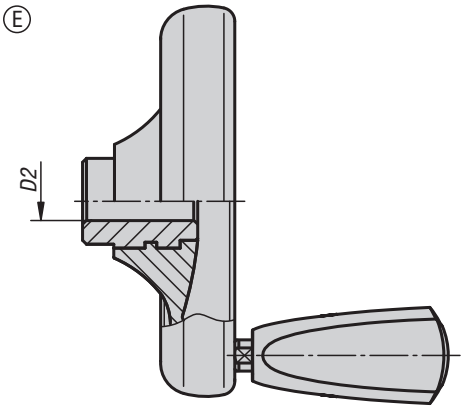

KIPP Handwheels disc, with revolving grip

Order No. Form D	Order No. Form E	D1	D2	D3	D4	D6	D7	D8	H	H1	H2	L1	L2	L3	L4
K0164.0100X06	**K0164.1100X10**	100	6/10H8	22	20	79	M6	29	12/-	9	8	29,5	19	39	54,7
K0164.0125X08	**K0164.1125X12**	125	8/12H8	26	21	101	M6	34	15/-	9	8	34	24	46	54,7
K0164.0140X08	**K0164.1140X14**	140	8/14H8	30	25	110	M8	39	16/-	12	8	38,5	27	52	82,2
K0164.0160X10	**K0164.1160X16**	160	10/16H8	33	30	128	M8	43	20/-	12	8	41,3	30,1	57	82,2
-	**K0164.1160X18**	160	18H8	33	30	128	M8	43	-	12	8	41,3	30,1	57	82,2

KIPP Handwheels disc, with revolving grip, metal parts stainless steel

Order No. Form D	Order No. Form E	D1	D2	D3	D4	D6	D7	D8	H	H1	H2	L1	L2	L3	L4
K0164.2100X06	**K0164.3100X10**	100	6/10H7	22	20	79	M6	29	12/-	9	8	29,5	19	39	54,7
K0164.2125X08	**K0164.3125X12**	125	8/12H7	26	21	101	M6	34	15/-	9	8	34	24	46	54,7
K0164.2140X08	**K0164.3140X14**	140	8/14H7	30	25	110	M8	39	16/-	12	8	38,5	27	52	82,2
K0164.2160X10	**K0164.3160X16**	160	10/16H7	33	30	128	M8	43	20/-	12	8	41,3	30,1	57	82,2
-	**K0164.3160X18**	160	18H7	33	30	128	M8	43	-	12	8	41,3	30,1	57	82,2

Handwheels disc

without grip

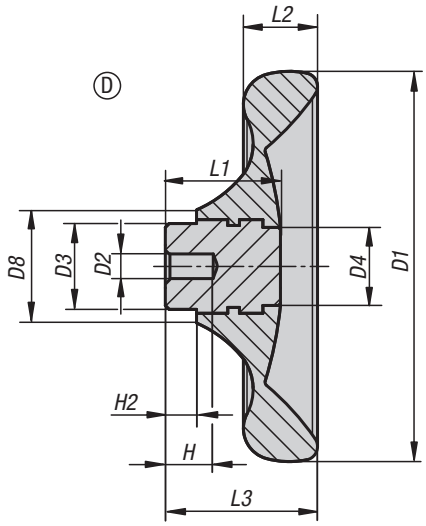

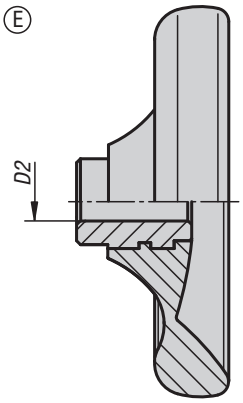

Material:
Black thermoset PF 31.
Hub nickel-plated steel or bright 1.4305 stainless steel.

Version:
High-gloss polished.

Sample order:
K0165.0100X06

On request:
Other reamed hole sizes.

Drawing reference:
Form D: pilot hole
Form E: reamed hole

KIPP Handwheels disc, without grip, bush steel

Order No. Form D	Order No. Form E	D1	D2	D3	D4	D8	H	H2	L1	L2	L3
K0165.0100X06	**K0165.1100X10**	100	6/10H8	22	20	29	12/-	8	29,5	19	39
K0165.0125X08	**K0165.1125X12**	125	8/12H8	26	21	34	15/-	8	34	24	46
K0165.0140X08	**K0165.1140X14**	140	8/14H8	30	25	39	16/-	8	38,5	27	52
K0165.0160X10	**K0165.1160X16**	160	10/16H8	33	30	43	20/-	8	41,3	30,1	57
-	**K0165.1160X18**	160	18H8	33	30	43	-	8	41,3	30,1	57

KIPP Handwheels disc, without grip, bush stainless steel

Order No. Form D	Order No. Form E	D1	D2	D3	D4	D8	H	H2	L1	L2	L3
K0165.2100X06	**K0165.3100X10**	100	6/10H7	22	20	29	12/-	8	29,5	19	39
K0165.2125X08	**K0165.3125X12**	125	8/12H7	26	21	34	15/-	8	34	24	46
K0165.2140X08	**K0165.3140X14**	140	8/14H7	30	25	39	16/-	8	38,5	27	52
K0165.2160X10	**K0165.3160X16**	160	10/16H7	33	30	43	20/-	8	41,3	30,1	57
-	**K0165.3160X18**	160	18H7	33	30	43	-	8	41,3	30,1	57

Handwheels

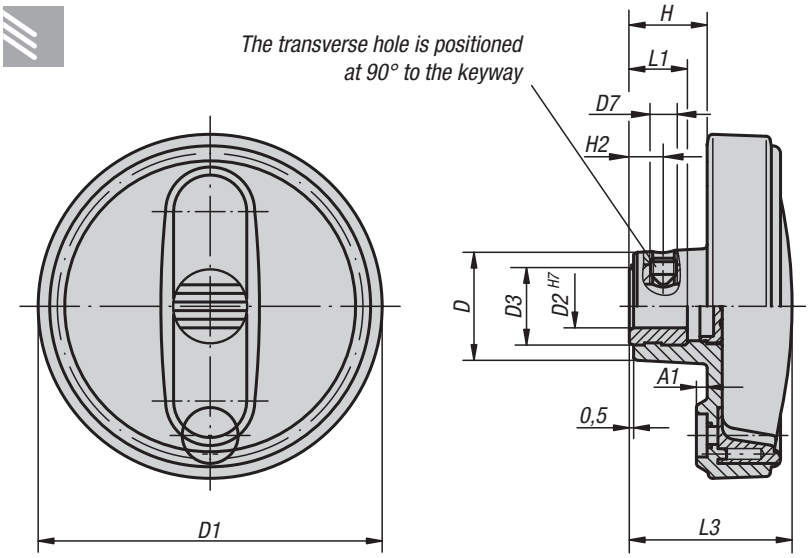

The quality of these handwheels is defined by precise rotation and secure grip. The handwheels can be mounted and safely used on high-performance equipment.

Material:
Black grey thermoplastic.

Version:
Steel parts black oxidised.

Sample order:
K0256.108008

Note:
The hub cap is supplied loose.
The handwheels can be secured using a transverse pin or by parallel key connection together with a DIN 6912 socket head screw and a DIN 7349 washer. Versions with transverse bore are fastened using the ISO 4027 (DIN 914) grub screws.

DIN 6885-1

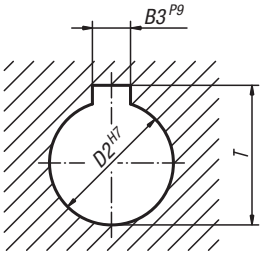

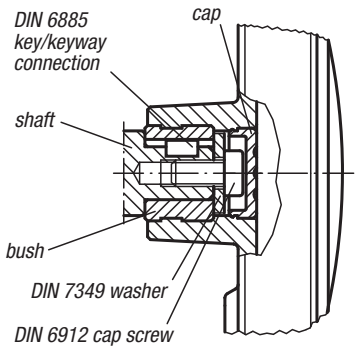

KIPP Handwheels

Order No. reamed hole	Order No. reamed hole with slot	D	D1	D2	D3	A1	H	L1	L3	B3	T
K0256.108008	K0256.10800802	25	80	8H7	19	2,5	17,5	13	37,5	-/2	-/9
K0256.108010	K0256.10801003	25	80	10H7	19	2,5	17,5	13	37,5	-/3	-/11,4
K0256.108012	K0256.10801204	25	80	12H7	19	2,5	17,5	13	37,5	-/4	-/13,8
K0256.210010	K0256.21001003	28	100	10H7	19	3	20	13	44	-/3	-/11,4
K0256.210012	K0256.21001204	28	100	12H7	19	3	20	13	44	-/4	-/13,8
K0256.312512	K0256.31251204	35	125	12H7	25	4	23,5	18,5	53	-/4	-/13,8
K0256.312514	K0256.31251405	35	125	14H7	25	4	23,5	18,5	53	-/5	-/16,3
K0256.312516	K0256.31251605	35	125	16H7	25	4	23,5	18,5	53	-/5	-/18,3
K0256.416014	K0256.41601405	45	160	14H7	25	5,6	28	18,5	64,5	-/5	-/16,3
K0256.416016	K0256.41601605	45	160	16H7	25	5,6	28	18,5	64,5	-/5	-/18,3

KIPP Handwheels with transverse bore

Order No. reamed hole	Order No. reamed hole with slot	D	D1	D2	D3	D7	A1	H	H2	L1	L3	B3	T
K0256.1080086	K0256.108008026	25	80	8H7	19	M6	2,5	17,5	7,5	13	37,5	-/2	-/9
K0256.1080106	K0256.108010036	25	80	10H7	19	M6	2,5	17,5	7,5	13	37,5	-/3	-/11,4
K0256.1080126	K0256.108012046	25	80	12H7	19	M6	2,5	17,5	7,5	13	37,5	-/4	-/13,8
K0256.2100106	K0256.210010036	28	100	10H7	19	M6	3	20	7,5	13	44	-/3	-/11,4
K0256.2100126	K0256.210012046	28	100	12H7	19	M6	3	20	7,5	13	44	-/4	-/13,8
K0256.3125126	K0256.312512046	35	125	12H7	25	M6	4	23,5	7,5	18,5	53	-/4	-/13,8
K0256.3125146	K0256.312514056	35	125	14H7	25	M6	4	23,5	7,5	18,5	53	-/5	-/16,3
K0256.3125166	K0256.312516056	35	125	16H7	25	M6	4	23,5	7,5	18,5	53	-/5	-/18,3
K0256.4160146	K0256.416014056	45	160	14H7	25	M6	5,6	28	7,5	18,5	64,5	-/5	-/16,3
K0256.4160166	K0256.416016056	45	160	16H7	25	M6	5,6	28	7,5	18,5	64,5	-/5	-/18,3

Handwheels

with revolving grip

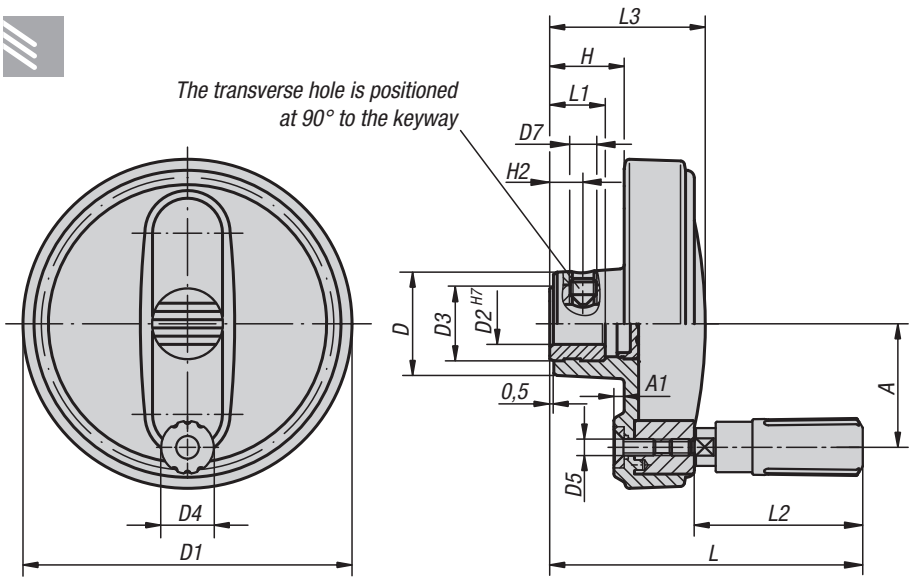

Material:
Black grey thermoplastic.

Version:
Steel parts black oxidised.

Sample order:
K0257.108008

Note:
The hub cover and the revolving cylinder grip are supplied unassembled. To assemble, screw the grip into the tapped hole.
The handwheels can be secured using a transverse pin or by parallel key connection together with a DIN 6912 socket head screw and a DIN 7349 washer. Versions with transverse bore are secured using the ISO 4027 (DIN 914) grub screw.

DIN 6885-1

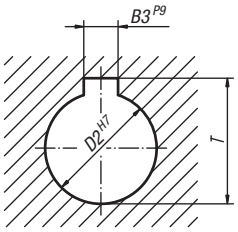

KIPP Handwheels with revolving cylinder grip

Order No. reamed hole	Order No. reamed hole with slot	D	D1	D2	D3	D4	D5	A	A1	H	L	L1	L2	L3	B3	T
K0257.108008	K0257.10800802	25	80	8H7	19	14	M4	30	2,5	17,6	74,6	13	40	36,7	-/2	-/9
K0257.108010	K0257.10801003	25	80	10H7	19	14	M4	30	2,5	17,6	74,6	13	40	36,7	-/3	-/11,4
K0257.108012	K0257.10801204	25	80	12H7	19	14	M4	30	2,5	17,6	74,6	13	40	36,7	-/4	-/13,8
K0257.210010	K0257.21001003	28	100	10H7	19	16	M5	38	3	20,1	90,2	13	49,1	43,5	-/3	-/11,4
K0257.210012	K0257.21001204	28	100	12H7	19	16	M5	38	3	20,1	90,2	13	49,1	43,5	-/4	-/13,8
K0257.312512	K0257.31251204	35	125	12H7	25	20	M6	47,5	4	23,3	110,7	18,5	61,4	52,1	-/4	-/13,8
K0257.312514	K0257.31251405	35	125	14H7	25	20	M6	47,5	4	23,3	110,7	18,5	61,4	52,1	-/5	-/16,3
K0257.312516	K0257.31251605	35	125	16H7	25	20	M6	47,5	4	23,3	110,7	18,5	61,4	52,1	-/5	-/18,3
K0257.416014	K0257.41601405	45	160	14H7	25	25	M8	62	5,6	28	143	18,5	82,5	63,8	-/5	-/16,3
K0257.416016	K0257.41601605	45	160	16H7	25	25	M8	62	5,6	28	143	18,5	82,5	63,8	-/5	-/18,3

KIPP Handwheels with revolving cylinder grip with transverse bore

Order No. reamed hole	Order No. reamed hole with slot	D	D1	D2	D3	D4	D5	D7	A	A1	H	H2	L	L1	L2	L3	B3	T
K0257.1080086	K0257.108008026	25	80	8H7	19	14	M4	M6	30	2,5	17,6	7,5	74,6	13	40	36,7	-/2	-/9
K0257.1080106	K0257.108010036	25	80	10H7	19	14	M4	M6	30	2,5	17,6	7,5	74,6	13	40	36,7	-/3	-/11,4
K0257.1080126	K0257.108012046	25	80	12H7	19	14	M4	M6	30	2,5	17,6	7,5	74,6	13	40	36,7	-/4	-/13,8
K0257.2100106	K0257.210010036	28	100	10H7	19	16	M5	M6	38	3	20,1	7,5	90,2	13	49,1	43,5	-/3	-/11,4
K0257.2100126	K0257.210012046	28	100	12H7	19	16	M5	M6	38	3	20,1	7,5	90,2	13	49,1	43,5	-/4	-/13,8
K0257.3125126	K0257.312512046	35	125	12H7	25	20	M6	M6	47,5	4	23,3	7,5	110,7	18,5	61,4	52,1	-/4	-/13,8
K0257.3125146	K0257.312514056	35	125	14H7	25	20	M6	M6	47,5	4	23,3	7,5	110,7	18,5	61,4	52,1	-/5	-/16,3
K0257.3125166	K0257.312516056	35	125	16H7	25	20	M6	M6	47,5	4	23,3	7,5	110,7	18,5	61,4	52,1	-/5	-/18,3
K0257.4160146	K0257.416014056	45	160	14H7	25	25	M8	M6	62	5,6	28	7,5	143	18,5	82,5	63,8	-/5	-/16,3
K0257.4160166	K0257.416016056	45	160	16H7	25	25	M8	M6	62	5,6	28	7,5	143	18,5	82,5	63,8	-/5	-/18,3

Handwheels

with fold-down grip

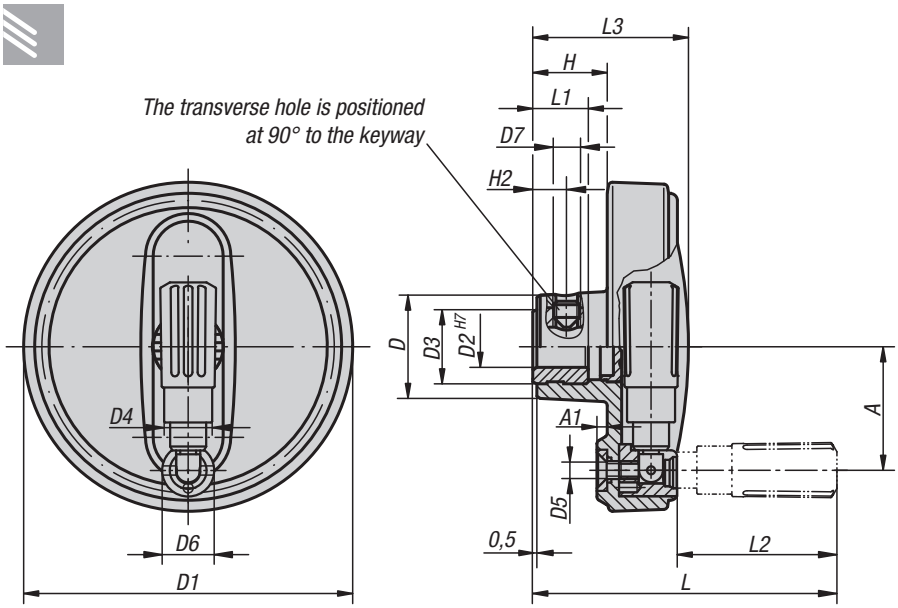

Material:
Black grey thermoplastic.

Version:
Steel parts black oxidised.

Sample order:
K0258.108008

Note:
The hub cover is supplied loose.
The handwheels can be secured using a transverse pin or by parallel key connection together with a DIN 6912 socket head screw and a DIN 7349 washer.
Versions with transverse bore are secured using the ISO 4027 (DIN 914) grub screw.
For assembly example, see K0256.

DIN 6885-1

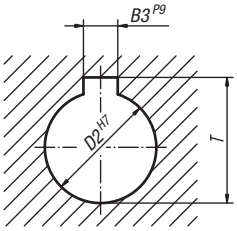

KIPP Handwheels with fold-down cylinder grip

Order No. reamed hole	Order No. reamed hole with slot	D	D1	D2	D3	D4	D5	D6	A	A1	H	L	L1	L2	L3	B3	T
K0258.108008	K0258.10800802	25	80	8H7	19	14	M4	13	30	2,5	17,6	74,6	13	40	36,7	-/2	-/9
K0258.108010	K0258.10801003	25	80	10H7	19	14	M4	13	30	2,5	17,6	74,6	13	40	36,7	-/3	-/11,4
K0258.108012	K0258.10801204	25	80	12H7	19	14	M4	13	30	2,5	17,6	74,6	13	40	36,7	-/4	-/13,8
K0258.210010	K0258.21001003	28	100	10H7	19	16	M5	16	38	3	20,1	90,1	13	49	43,5	-/3	-/11,4
K0258.210012	K0258.21001204	28	100	12H7	19	16	M5	16	38	3	20,1	90,1	13	49	43,5	-/4	-/13,8
K0258.312512	K0258.31251204	35	125	12H7	25	20	M6	20	47,5	4	23,3	108,8	18,5	59,5	52,1	-/4	-/13,8
K0258.312514	K0258.31251405	35	125	14H7	25	20	M6	20	47,5	4	23,3	108,8	18,5	59,5	52,1	-/5	-/16,3
K0258.312516	K0258.31251605	35	125	16H7	25	20	M6	20	47,5	4	23,3	108,8	18,5	59,5	52,1	-/5	-/18,3
K0258.416014	K0258.41601405	45	160	14H7	25	25	M8	26	62	5,6	28	143,5	18,5	83	63,8	-/5	-/16,3
K0258.416016	K0258.41601605	45	160	16H7	25	25	M8	26	62	5,6	28	143,5	18,5	83	63,8	-/5	-/18,3

KIPP Handwheels with fold-down grip with transverse bore

Order No. reamed hole	Order No. reamed hole with slot	D	D1	D2	D3	D4	D5	D6	D7	A	A1	H	H2	L	L1	L2	L3	B3	T
K0258.1080086	K0258.108008026	25	80	8H7	19	14	M4	13	M6	30	2,5	17,6	7,5	74,6	13	40	36,7	-/2	-/9
K0258.1080106	K0258.108010036	25	80	10H7	19	14	M4	13	M6	30	2,5	17,6	7,5	74,6	13	40	36,7	-/3	-/11,4
K0258.1080126	K0258.108012046	25	80	12H7	19	14	M4	13	M6	30	2,5	17,6	7,5	74,6	13	40	36,7	-/4	-/13,8
K0258.2100106	K0258.210010036	28	100	10H7	19	16	M5	16	M6	38	3	20,1	7,5	90,1	13	49	43,5	-/3	-/11,4
K0258.2100126	K0258.210012046	28	100	12H7	19	16	M5	16	M6	38	3	20,1	7,5	90,1	13	49	43,5	-/4	-/13,8
K0258.3125126	K0258.312512046	35	125	12H7	25	20	M6	20	M6	47,5	4	23,3	7,5	108,8	18,5	59,5	52,1	-/4	-/13,8
K0258.3125146	K0258.312514056	35	125	14H7	25	20	M6	20	M6	47,5	4	23,3	7,5	108,8	18,5	59,5	52,1	-/5	-/16,3
K0258.3125166	K0258.312516056	35	125	16H7	25	20	M6	20	M6	47,5	4	23,3	7,5	108,8	18,5	59,5	52,1	-/5	-/18,3
K0258.4160146	K0258.416014056	45	160	14H7	25	25	M8	26	M6	62	5,6	28	7,5	143,5	18,5	83	63,8	-/5	-/16,3
K0258.4160166	K0258.416016056	45	160	16H7	25	25	M8	26	M6	62	5,6	28	7,5	143,5	18,5	83	63,8	-/5	-/18,3

Handwheels

with safety grip

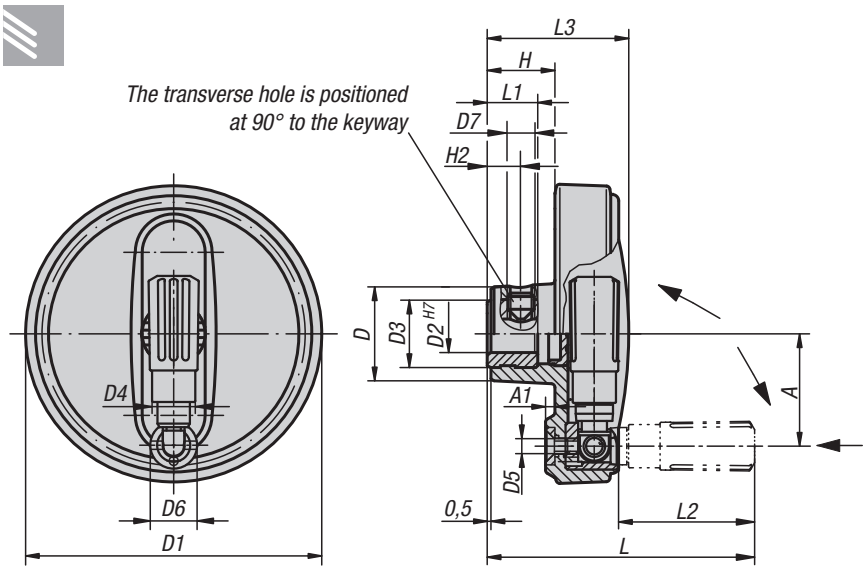

Material:
Black grey thermoplastic.

Version:
Steel parts black oxidised.

Sample order:
K0259.108008

Note:
The hub cover is supplied loose. The handwheels can be secured using a transverse pin or by parallel key connection together with a DIN 6912 socket head screw and a DIN 7349 washer.
Two steps have to be carried out to bring the cylindrical safety grip into operating position:
- Swivel the grip around the axis of rotation until it stops (90°).
- Push grip in axial position into locking position.
  The pressed-in position is the most comfortable position to crank. When released, the grip automatically returns to original position.

Versions with transverse bore are secured using the ISO 4027 (DIN 914) grub screw.
For assembly examples, see K0256.

DIN 6885-1

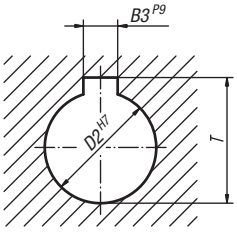

KIPP Handwheels with safety cylinder grip

Order No. reamed hole	Order No. reamed hole with slot	D	D1	D2	D3	D4	D5	D6	A	A1	H	L	L1	L2	L3	B3	T
K0259.108008	K0259.10800802	25	80	8H7	19	14	M4	13	30	2,5	17,6	72,6	13	38	36,7	-/2	-/9
K0259.108010	K0259.10801003	25	80	10H7	19	14	M4	13	30	2,5	17,6	72,6	13	38	36,7	-/3	-/11,4
K0259.108012	K0259.10801204	25	80	12H7	19	14	M4	13	30	2,5	17,6	72,6	13	38	36,7	-/4	-/13,8
K0259.210010	K0259.21001003	28	100	10H7	19	16	M5	16	38	3	20,1	88,6	13	47,5	43,5	-/3	-/11,4
K0259.210012	K0259.21001204	28	100	12H7	19	16	M5	16	38	3	20,1	88,6	13	47,5	43,5	-/4	-/13,8
K0259.312512	K0259.31251204	35	125	12H7	25	20	M6	20	47,5	4	23,3	107,7	18,5	58,4	52,1	-/4	-/13,8
K0259.312514	K0259.31251405	35	125	14H7	25	20	M6	20	47,5	4	23,3	107,7	18,5	58,4	52,1	-/5	-/16,3
K0259.312516	K0259.31251605	35	125	16H7	25	20	M6	20	47,5	4	23,3	107,7	18,5	58,4	52,1	-/5	-/18,3
K0259.416014	K0259.41601405	45	160	14H7	25	25	M8	26	62	5,6	28	142	18,5	81,6	63,8	-/5	-/16,3
K0259.416016	K0259.41601605	45	160	16H7	25	25	M8	26	62	5,6	28	142	18,5	81,6	63,8	-/5	-/18,3

KIPP Handwheels with safety cylinder grip with transverse bore

Order No. reamed hole	Order No. reamed hole with slot	D	D1	D2	D3	D4	D5	D6	D7	A	A1	H	H2	L	L1	L2	L3	B3	T
K0259.1080086	K0259.108008026	25	80	8H7	19	14	M4	13	M6	30	2,5	17,6	7,5	72,6	13	38	36,7	-/2	-/9
K0259.1080106	K0259.108010036	25	80	10H7	19	14	M4	13	M6	30	2,5	17,6	7,5	72,6	13	38	36,7	-/3	-/11,4
K0259.1080126	K0259.108012046	25	80	12H7	19	14	M4	13	M6	30	2,5	17,6	7,5	72,6	13	38	36,7	-/4	-/13,8
K0259.2100106	K0259.210010036	28	100	10H7	19	16	M5	16	M6	38	3	20,1	7,5	88,6	13	47,5	43,5	-/3	-/11,4
K0259.2100126	K0259.210012046	28	100	12H7	19	16	M5	16	M6	38	3	20,1	7,5	88,6	13	47,5	43,5	-/4	-/13,8
K0259.3125126	K0259.312512046	35	125	12H7	25	20	M6	20	M6	47,5	4	23,3	7,5	107,7	18,5	58,4	52,1	-/4	-/13,8
K0259.3125146	K0259.312514056	35	125	14H7	25	20	M6	20	M6	47,5	4	23,3	7,5	107,7	18,5	58,4	52,1	-/5	-/16,3
K0259.3125166	K0259.312516056	35	125	16H7	25	20	M6	20	M6	47,5	4	23,3	7,5	107,7	18,5	58,4	52,1	-/5	-/18,3
K0259.4160146	K0259.416014056	45	160	14H7	25	25	M8	26	M6	62	5,6	28	7,5	142	18,5	81,6	63,8	-/5	-/16,3
K0259.4160166	K0259.416016056	45	160	16H7	25	25	M8	26	M6	62	5,6	28	7,5	142	18,5	81,6	63,8	-/5	-/18,3

Handwheels

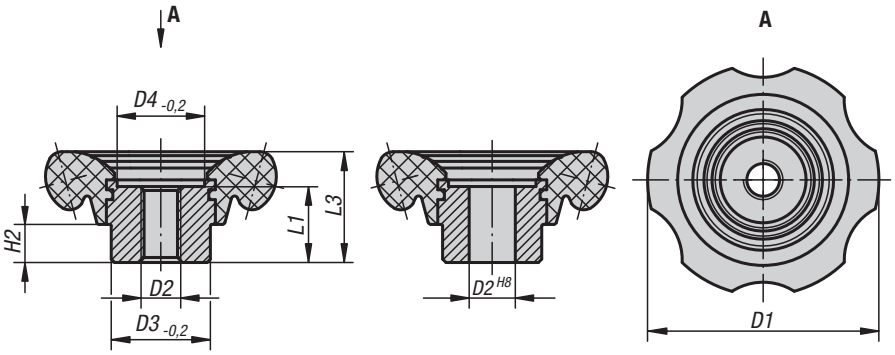

Material:
Handwheel thermoset PF 31.
Bush steel, black oxidised.

Version:
High-gloss polished, black.

Sample order:
K0184.70112

KIPP Handwheels

Order No.	Version 1	D1	D2	D3	D4	H2	L1	L3
K0184.70110	internal thread	70	M10	30	26,5	11,5	23	33,5
K0184.70112	internal thread	70	M12	30	26,5	11,5	23	33,5
K0184.83112	internal thread	83	M12	35	31,5	14	28	40
K0184.83116	internal thread	83	M16	35	31,5	14	28	40
K0184.70212	reamed hole	70	12H8	30	26,5	11,5	23	33,5
K0184.70214	reamed hole	70	14H8	30	26,5	11,5	23	33,5
K0184.83214	reamed hole	83	14H8	35	31,5	14	28	40
K0184.83216	reamed hole	83	16H8	35	31,5	14	28	40

Knurled knobs

with grip

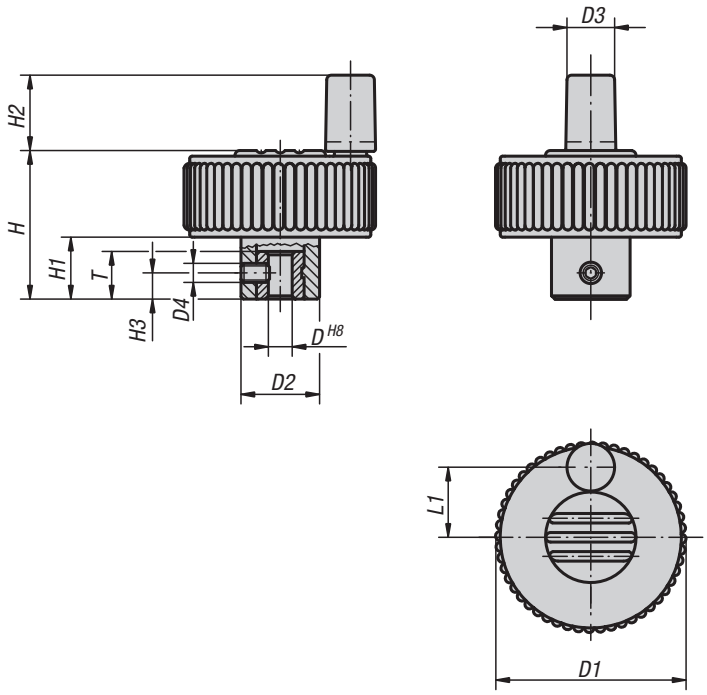

Material:
Black thermoplastic.
Bush grade 5.8 steel.

Version:
Steel trivalent blue passivated.

Sample order:
K0262.21066 (cap colour traffic red)

Note:
Δ Add the desired cap colour here.
No colour code is required for black grey caps.

Drawing reference:
Form H: without locking grub screw
Form M: with locking grub screw

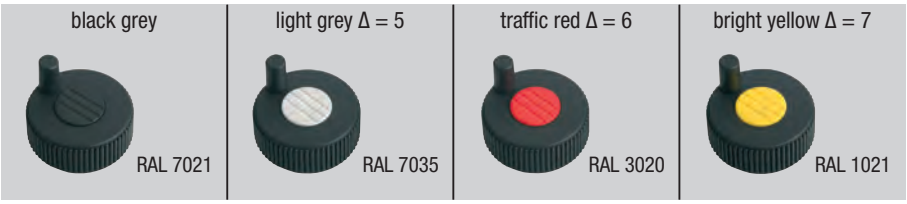

KIPP Knurled knobs with grip

Order No.	Form	D	D1	D2	D3	D4	H	H1	H2	H3	L1	T
K0262.2106Δ	H	6H8	40	16,5	10	-	31	13	16	-	15	10
K0262.2206Δ	H	6H8	50	18	10	-	36	15	16	-	18,5	10
K0262.2308Δ	H	8H8	63	22	10	-	41	17	16	-	25	14
K0262.1106Δ	M	6H8	40	16,5	10	M4	31	13	16	5,5	15	10
K0262.1206Δ	M	6H8	50	18	10	M4	36	15	16	5,5	18,5	10
K0262.1308Δ	M	8H8	63	22	10	M4	41	17	16	8	25	14

Deltawheels

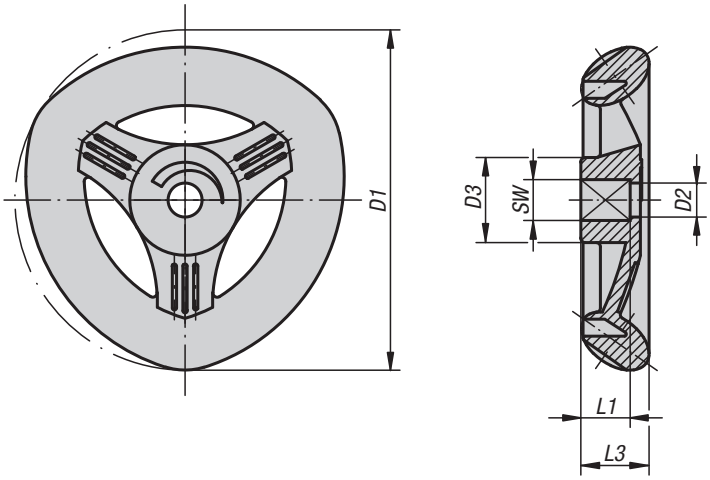

NOVO grip Deltawheels lend your ideas a concrete form and definite shape. Apart from being attractive, the delta form of these handwheels also offers a really comfortable and secure grip.

Material:
Fibreglass reinforced thermoplastic.

Sample order:
K0275.050051 (colour signal green)

Note:
Δ Add the desired colour here. No colour code is required for black grey.

black grey	signal green Δ = 1	traffic red Δ = 2	bright yellow Δ = 3	traffic blue Δ = 4
RAL 7021	RAL 6032	RAL 3020	RAL 1021	RAL 5017

KIPP Deltawheels

Order No.	D1	D2	D3	L1	L3	Square socket SW
K0275.05005Δ	50	5	12,5	7,3	10	5
K0275.05006Δ	50	5	12,5	7,3	10	6
K0275.06306Δ	63	5	15,8	9	12,6	6
K0275.06307Δ	63	5	15,8	9	12,6	7
K0275.08008Δ	80	5	20	12	16	8
K0275.08009Δ	80	5	20	12	16	9

Ball grips revolving

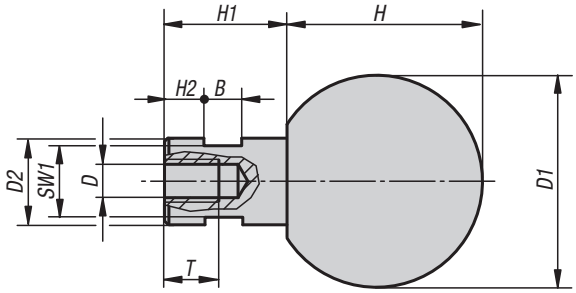

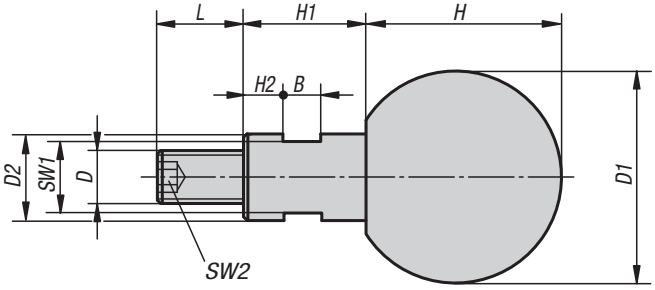

Material:
Ball thermoset PF 31.
Bush and screw steel or stainless steel 1.4305.

Version:
Ball black glossy.
Steel trivalent blue passivated.
Stainless steel bright.

Sample order:
K0726.061

KIPP Ball grips revolving with female thread

Order No. steel	Order No. stainless steel	B	D	D1	D2	H	H1	H2	SW1	T
K0726.060	**K0726.1060**	5	M6	25	10	22,5	15	5	8	12,5
K0726.080	**K0726.1080**	6	M8	32	13	29,5	19	6	10	15
K0726.100	**K0726.1100**	8	M10	40	16	37	24	8	13	19
K0726.120	**K0726.1120**	10	M12	50	20	47	31	12	17	21,5

KIPP Ball grips revolving with male thread

Order No. steel	Order No. stainless steel	B	D	D1	D2	H	H1	H2	L	SW1	SW2
K0726.061	**K0726.1061**	5	M6	25	10	22,5	15	5	11	8	3
K0726.081	**K0726.1081**	6	M8	32	13	29,5	19	6	13	10	4
K0726.101	**K0726.1101**	8	M10	40	16	37	24	8	14	13	5
K0726.121	**K0726.1121**	10	M12	50	20	47	31	12	21	17	6

Crank handles offset

similar to DIN 468

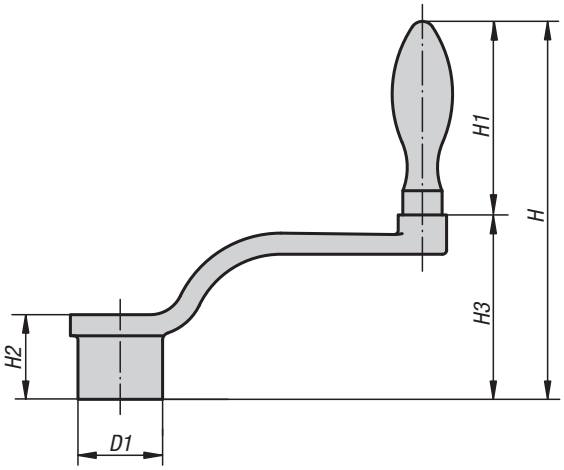

Material:
Crank arm malleable or ductile iron.

Version:
Blasted.

Sample order:
K0684.212X14

Drawing reference:
Form D: with revolving handle
Form F: with fixed handle

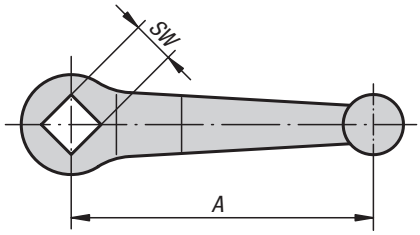

KIPP Crank handles offset similar DIN 468

Order No.	Form	A	D1	H	H1	H2	H3	SW	Grip Ø
K0684.206X10	D	63	20	92	52	20	40	10 +0,2	16
K0684.208X10	D	80	24	109	65	24	44	10 +0,2	20
K0684.208X12	D	80	24	109	65	24	44	12 +0,2	20
K0684.210X12	D	100	28	120	65	28	55	12 +0,2	20
K0684.210X14	D	100	28	120	65	28	55	14 +0,3	20
K0684.212X14	D	125	34	141	83	34	58	14 +0,3	25
K0684.212X17	D	125	34	141	83	34	58	17 +0,3	25
K0684.216X17	D	160	37	153	83	38	70	17 +0,3	25
K0684.216X19	D	160	37	153	83	38	70	19 +0,3	25
K0684.220X19	D	200	40	189	105	44	84	19 +0,3	32
K0684.220X22	D	200	40	189	105	44	84	22 +0,3	32
K0684.106X10	F	63	20	92	52	20	40	10 +0,2	16
K0684.108X10	F	80	24	109	65	24	44	10 +0,2	20
K0684.108X12	F	80	24	109	65	24	44	12 +0,2	20
K0684.110X12	F	100	28	120	65	28	55	12 +0,2	20
K0684.110X14	F	100	28	120	65	28	55	14 +0,3	20
K0684.112X14	F	125	34	141	83	34	58	14 +0,3	25
K0684.112X17	F	125	34	141	83	34	58	17 +0,3	25
K0684.116X17	F	160	37	153	83	38	70	17 +0,3	25
K0684.116X19	F	160	37	153	83	38	70	19 +0,3	25
K0684.120X19	F	200	40	189	105	44	84	19 +0,3	32
K0684.120X22	F	200	40	189	105	44	84	22 +0,3	32

Crank handles straight

similar to DIN 469

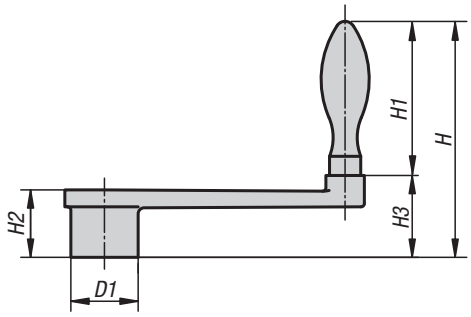

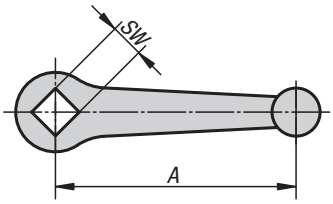

Material:
Crank arm malleable or ductile iron.

Version:
Blasted.

Sample order:
K0685.120X22

Drawing reference:
Form D: with revolving handle
Form F: with fixed handle

KIPP Crank handles straight similar DIN 469

Order No.	Form	A	D1	H	H1	H2	H3	SW	Grip Ø
K0685.206X10	D	63	20	80	52	20	28	10 +0,2	16
K0685.208X10	D	80	24	98	65	24	33	10 +0,2	20
K0685.208X12	D	80	24	98	65	24	33	12 +0,2	20
K0685.210X12	D	100	28	102	65	28	37	12 +0,2	20
K0685.210X14	D	100	28	102	65	28	37	14 +0,3	20
K0685.212X14	D	125	34	120	80	34	40	14 +0,3	25
K0685.212X17	D	125	34	120	80	34	40	17 +0,3	25
K0685.216X17	D	160	37	131	83	38	48	17 +0,3	25
K0685.216X19	D	160	37	131	83	38	48	19 +0,3	25
K0685.220X19	D	200	40	158	105	44	53	19 +0,3	32
K0685.220X22	D	200	40	158	105	44	53	22 +0,3	32
K0685.106X10	F	63	20	80	52	20	28	10 +0,2	16
K0685.108X10	F	80	24	98	65	24	33	10 +0,2	20
K0685.108X12	F	80	24	98	65	24	33	12 +0,2	20
K0685.110X12	F	100	28	102	65	28	37	12 +0,2	20
K0685.110X14	F	100	28	102	65	28	37	14 +0,3	20
K0685.112X14	F	125	34	120	80	34	40	14 +0,3	25
K0685.112X17	F	125	34	120	80	34	40	17 +0,3	25
K0685.116X17	F	160	37	131	83	38	48	17 +0,3	25
K0685.116X19	F	160	37	131	83	38	48	19 +0,3	25
K0685.120X19	F	200	40	158	105	44	53	19 +0,3	32
K0685.120X22	F	200	40	158	105	44	53	22 +0,3	32

Crank handles aluminium

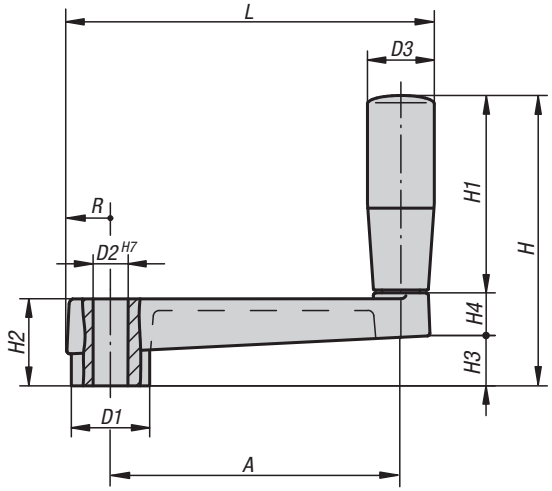

Material:
Aluminium.
Grip thermoplastic.

Version:
Arm powder-coated, black.
Grip black.

Sample order:
K0727.100

KIPP Crank handles aluminium

Order No.	A	D1	D2	D3	H	H1	H2	H3	H4	L	R
K0727.100	80	23	10	21	81	53	24	14	14	103,5	13
K0727.120	100	27	12	23	100	68	28	17	15	126,5	15
K0727.140	125	32	14	26	123	83	34	22	18	155,5	17,5

Notes

Crank handles aluminium

with fold-away grip

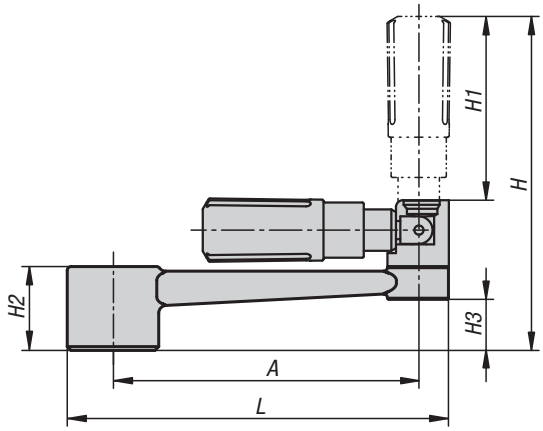

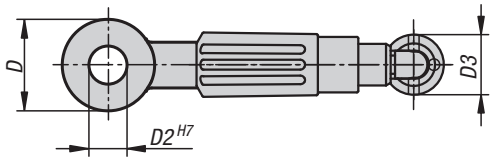

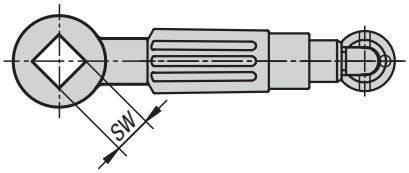

Material:
Crank AlSi9Cu3 3.2163.
Cylinder grip thermoplastic PA6 and steel.

Version:
Crank black powder coated.
Thermoplastic black.
Steel parts black oxidised.

Sample order:
K0997.1110

Note:
Similar to DIN 469.

KIPP Crank handles aluminium with fold-away cylinder grip

Order No.	Version 1	A	D	D2	D3	H	H1	H2	H3	L
K0997.1110	reamed hole	80	24	10	16	89	49	22	13,4	100
K0997.1212	reamed hole	100	28	12	20	107,9	59,4	26	16	124
K0997.1314	reamed hole	125	30	14	26	140,5	83,5	28	15,8	153
K0997.1417	reamed hole	160	34	17	26	144,5	83,5	32	19,6	190

Order No.	Version 1	A	D	D3	H	H1	H2	H3	L	SW
K0997.2110	square socket	80	24	16	89	49	22	13,4	100	10
K0997.2212	square socket	100	28	20	107,9	59,4	26	16	124	12
K0997.2314	square socket	125	30	26	140,5	83,5	28	15,8	153	14
K0997.2417	square socket	160	34	26	144,5	83,5	32	19,6	190	17

Crank handles aluminium

with revolving grip

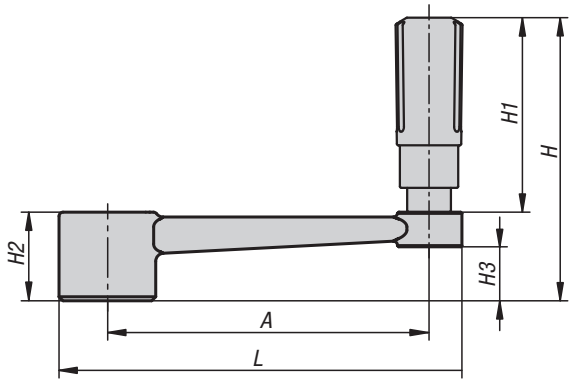

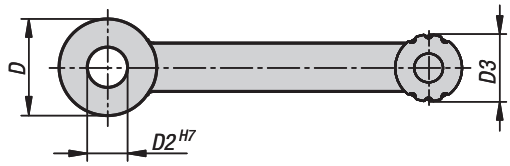

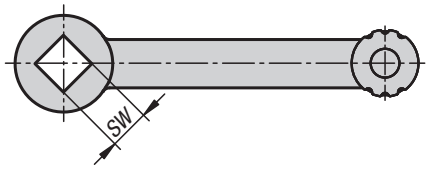

Material:
Crank AlSi9Cu3 3.2163.
Revolving grip thermoplastic PA6 and steel 1.0718.

Version:
Crank black powder coated.
Thermoplastic black.
Steel parts black oxidised.

Sample order:
K0996.3110

Note:
Similar to DIN 469.

KIPP Crank handles aluminium with cylindrical revolving grip

Order No.	Version 1	A	D	D2	D3	H	H1	H2	H3	L
K0996.3110	reamed hole	80	24	10	16	71,1	49,1	22	13,4	100
K0996.3212	reamed hole	100	28	12	20	87,4	61,4	26	16	124
K0996.3314	reamed hole	125	30	14	26	111	83	28	15,8	153
K0996.3417	reamed hole	160	34	17	26	115	83	32	19,6	190

Order No.	Version 1	A	D	D3	H	H1	H2	H3	L	SW
K0996.4110	square socket	80	24	16	71,1	49,1	22	13,4	100	10
K0996.4212	square socket	100	28	20	87,4	61,4	26	16	124	12
K0996.4314	square socket	125	30	26	111	83	28	15,8	153	14
K0996.4417	square socket	160	34	26	115	83	32	19,6	190	17

Crank handles aluminium

with safety grip

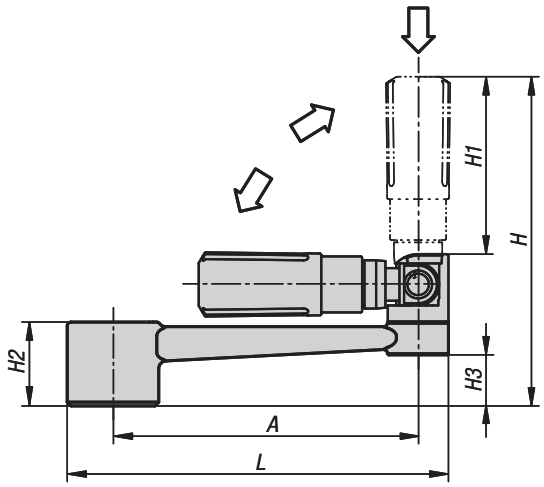

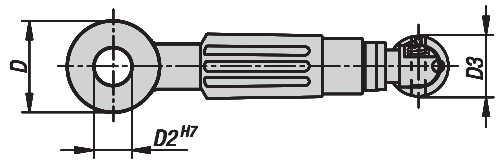

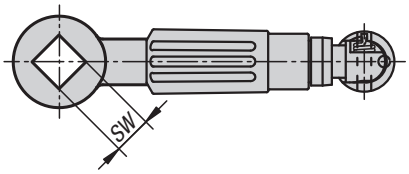

Material:
Crank AlSi9Cu3 3.2163.
Safety cylinder grip thermoplastic PA6 and steel.

Version:
Crank black powder coated.
Thermoplastic black.
Steel parts black oxidised.

Sample order:
K0998.1110

Note:
Similar to DIN 469.

KIPP Crank handle aluminium with safety cylinder grip

Order No.	Version 1	A	D	D2	D3	H	H1	H2	H3	L
K0998.1110	reamed hole	80	24	10	16	87,5	47,5	22	13,4	100
K0998.1212	reamed hole	100	28	12	20	106,9	58,4	26	16	124
K0998.1314	reamed hole	125	30	14	26	139,1	82,1	28	15,8	153
K0998.1417	reamed hole	160	34	17	26	143,1	82,1	32	19,6	190

Order No.	Version 1	A	D	D3	H	H1	H2	H3	L	SW
K0998.2110	square socket	80	24	16	87,5	47,5	22	13,4	100	10
K0998.2212	square socket	100	28	20	106,9	58,4	26	16	124	12
K0998.2314	square socket	125	30	26	139,1	82,1	28	15,8	153	14
K0998.2417	square socket	160	34	26	143,1	82,1	32	19,6	190	17

Crank handles stainless steel

with revolving grip

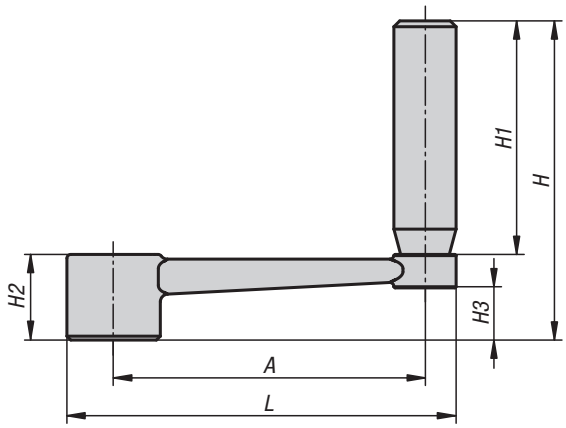

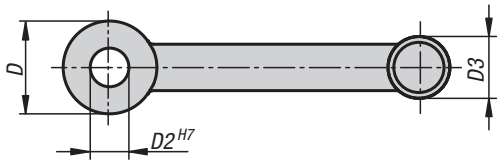

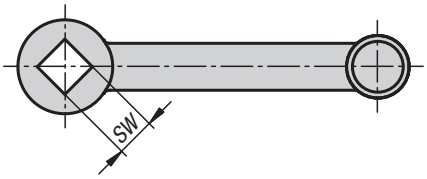

Material:
Crank stainless steel 1.4308.
Axle pin and revolving grip stainless steel 1.4305.
Retaining ring stainless steel 1.4310.

Version:
Bright.

Sample order:
K0999.3110

Note:
Similar to DIN 469.

KIPP Crank handles stainless steel with cylindrical revolving grip

Order No.	Version 1	A	D	D2	D3	H	H1	H2	H3	L
K0999.3110	reamed hole	80	24	10	16	82	60	22	13,4	100
K0999.3212	reamed hole	100	28	12	20	98	72	26	16	124
K0999.3314	reamed hole	125	30	14	26	118	90	28	15,8	153
K0999.3417	reamed hole	160	34	17	26	122	90	32	19,6	190

Order No.	Version 1	A	D	D3	H	H1	H2	H3	L	SW
K0999.4110	square socket	80	24	16	82	60	22	13,4	100	10
K0999.4212	square socket	100	28	20	98	72	26	16	124	12
K0999.4314	square socket	125	30	26	118	90	28	15,8	153	14
K0999.4417	square socket	160	34	26	122	90	32	19,6	190	17

Crank handles

with fold-down grip

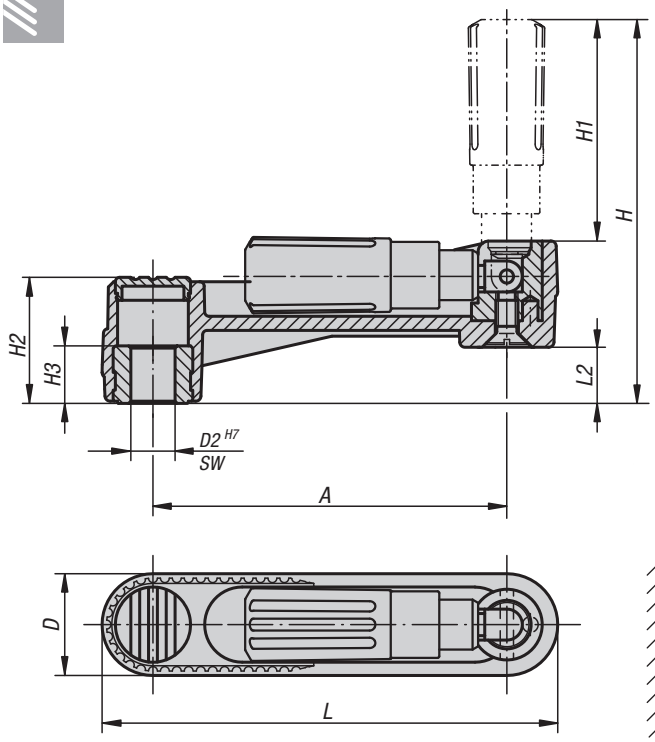

DIN 6885-1

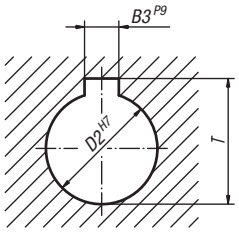

These crank handles have standard centre distances. They come with fold-down grips, are made from highly robust reinforced plastics and can be mounted on round or square shafts. They can be secured radially or axially.

Material:
Black grey thermoplastic.

Version:
Steel parts black oxidised.

Sample order:
K0266.1108

Note:
The hub cap is supplied loose.
The crank handle can be secured to a shaft using a transverse pin or by parallel key connection together with a DIN 6912 socket head screw and a DIN 7349 washer.

KIPP Crank handles with fold-down grip

Order No.	Version 1	A	D	D2	H	H1	H2	H3	L	L2
K0266.1108	reamed hole	80	24	8	85.5	49	29	13	104	13
K0266.1110	reamed hole	80	24	10	85.5	49	29	13	104	13
K0266.1210	reamed hole	100	29	10	105	59,5	36	13	129	16
K0266.1212	reamed hole	100	29	12	105	59,5	36	13	129	16
K0266.1312	reamed hole	125	36	12	140	83,5	44	18,5	161	19,5
K0266.1314	reamed hole	125	36	14	140	83,5	44	18,5	161	19,5

Order No.	Version 1	A	B3	D	D2	H	H1	H2	H3	L	L2	T
K0266.110802	reamed hole with slot	80	2	24	8	85.5	49	29	13	104	13	9
K0266.111003	reamed hole with slot	80	3	24	10	85.5	49	29	13	104	13	11,4
K0266.121003	reamed hole with slot	100	3	29	10	105	59,5	36	13	129	16	11,4
K0266.121204	reamed hole with slot	100	4	29	12	105	59,5	36	13	129	16	13,8
K0266.131204	reamed hole with slot	125	4	36	12	140	83,5	44	18,5	161	19,5	13,8
K0266.131405	reamed hole with slot	125	5	36	14	140	83,5	44	18,5	161	19,5	16,3

Order No.	Version 1	A	D	H	H1	H2	H3	L	L2	SW
K0266.2108	square socket	80	24	85.5	49	29	13	104	13	8
K0266.2110	square socket	80	24	85.5	49	29	13	104	13	10
K0266.2210	square socket	100	29	105	59,5	36	13	129	16	10
K0266.2212	square socket	100	29	105	59,5	36	13	129	16	12
K0266.2312	square socket	125	36	140	83,5	44	18,5	161	19,5	12
K0266.2314	square socket	125	36	140	83,5	44	18,5	161	19,5	14

Crank handles

with revolving grip

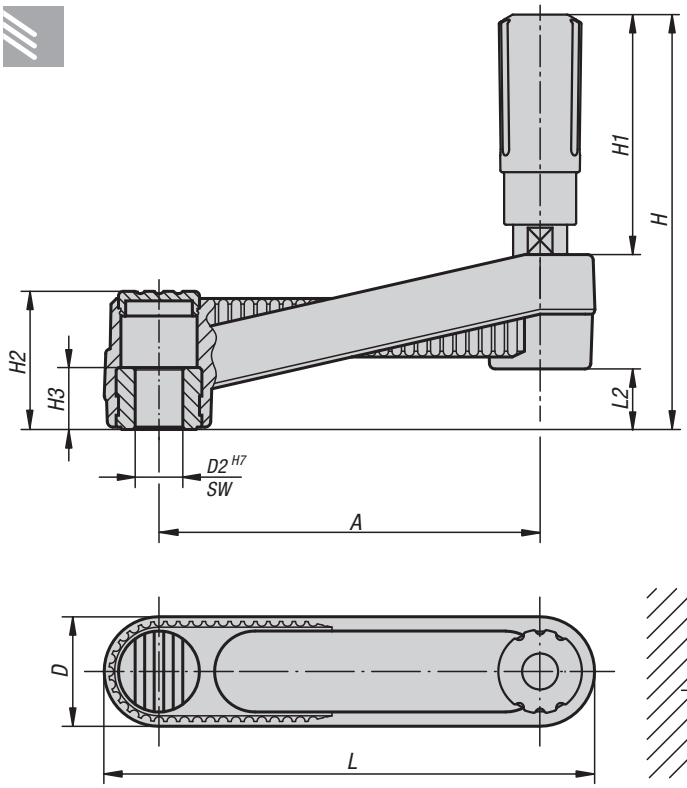

DIN 6885-1

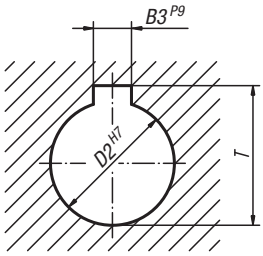

These crank handles set future trends in all fields. They combine sophisticated technology with easy handling and universal application.

Material:
Black grey thermoplastic.

Version:
Steel parts black oxidised.

Sample order:
K0659.3108

Note:
The hub cap and the revolving grip are supplied loose. To assemble the handle simply screw the grip into the existing hole.
The crank handles can be secured to a shaft by using a transverse pin or by parallel key connection together with a DIN 6912 cap screw and a DIN 7349 washer.

KIPP Crank handles with revolving grip

Order No.	Version 1	A	D	D2	H	H1	H2	H3	L	L2
K0659.3108	reamed hole	80	24	8	85.5	49	29	13	104	13
K0659.3110	reamed hole	80	24	10	85.5	49	29	13	104	13
K0659.3210	reamed hole	100	29	10	105	59,5	36	13	129	16
K0659.3212	reamed hole	100	29	12	105	59,5	36	13	129	16
K0659.3312	reamed hole	125	36	12	140	83,5	44	18,5	161	19,5
K0659.3314	reamed hole	125	36	14	140	83,5	44	18,5	161	19,5

Order No.	Version 1	A	B3	D	D2	H	H1	H2	H3	L	L2	T
K0659.310802	reamed hole with slot	80	2	24	8	85.5	49	29	13	104	13	9
K0659.311003	reamed hole with slot	80	3	24	10	85.5	49	29	13	104	13	11,4
K0659.321003	reamed hole with slot	100	3	29	10	105	59,5	36	13	129	16	11,4
K0659.321204	reamed hole with slot	100	4	29	12	105	59,5	36	13	129	16	13,8
K0659.331204	reamed hole with slot	125	4	36	12	140	83,5	44	18,5	161	19,5	13,8
K0659.331405	reamed hole with slot	125	5	36	14	140	83,5	44	18,5	161	19,5	16,3

Order No.	Version 1	A	D	H	H1	H2	H3	L	L2	SW
K0659.4108	square socket	80	24	85.5	49	29	13	104	13	8
K0659.4110	square socket	80	24	85.5	49	29	13	104	13	10
K0659.4210	square socket	100	29	105	59,5	36	13	129	16	10
K0659.4212	square socket	100	29	105	59,5	36	13	129	16	12
K0659.4312	square socket	125	36	140	83,5	44	18,5	161	19,5	12
K0659.4314	square socket	125	36	140	83,5	44	18,5	161	19,5	14

Crank handles

with safety grip

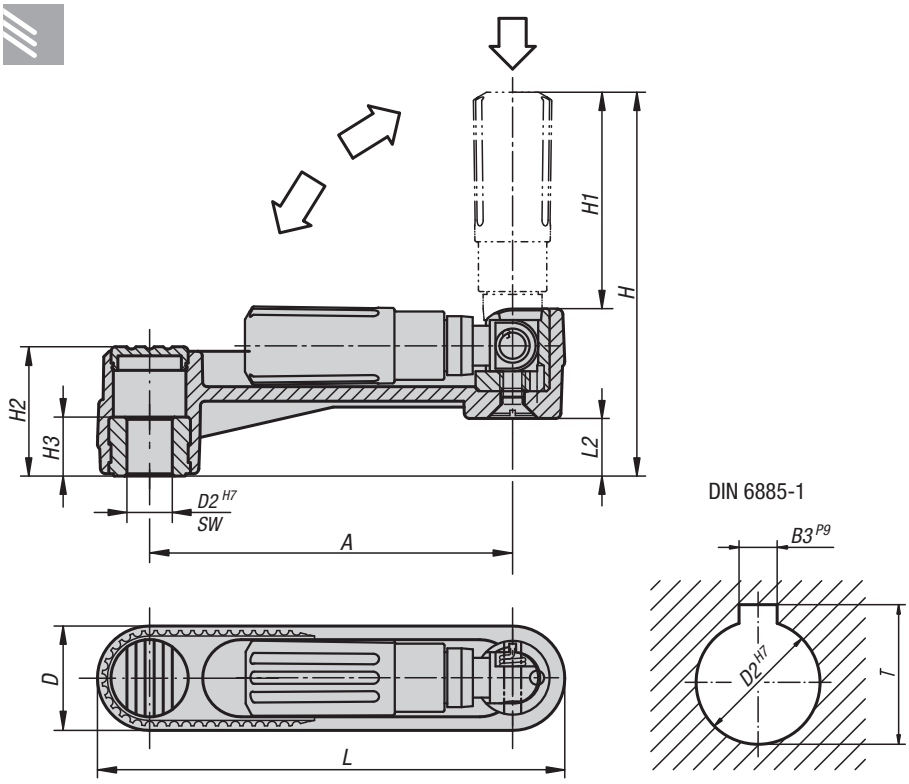

Material:
Arm and grip black grey thermoplastic.

Version:
Steel parts black oxidised.

Sample order:
K0268.1108

Note:
The hub cover is supplied loose.
The crank handles can be secured to the shaft by cross-pinning or by parallel key together with a DIN 6912 socket head screw and DIN 7349 washer.
Two actions must be made to bring the safety grip into an operating position:
- Swing the grip out until it stops (90°).
- Push the grip in until it locks.

The pushed-in position is the most comfortable for cranking. The grip swings back automatically after releasing.

KIPP Crank handles with safety grip

Order No.	Version 1	A	D	D2	H	H1	H2	H3	L	L2
K0268.1108	reamed hole	80	24	8	84	47,5	29	13	104	13
K0268.1110	reamed hole	80	24	10	84	47,5	29	13	104	13
K0268.1210	reamed hole	100	29	10	104	58,5	36	13	129	16
K0268.1212	reamed hole	100	29	12	104	58,5	36	13	129	16
K0268.1312	reamed hole	125	36	12	138,5	82	44	18,5	161	19,5
K0268.1314	reamed hole	125	36	14	138,5	82	44	18,5	161	19,5

Order No.	Version 1	A	B3	D	D2	H	H1	H2	H3	L	L2	T
K0268.110802	reamed hole with slot	80	2	24	8	84	47,5	29	13	104	13	9
K0268.111003	reamed hole with slot	80	3	24	10	84	47,5	29	13	104	13	11,4
K0268.121003	reamed hole with slot	100	3	29	10	104	58,5	36	13	129	16	11,4
K0268.121204	reamed hole with slot	100	4	29	12	104	58,5	36	13	129	16	13,8
K0268.131204	reamed hole with slot	125	4	36	12	138,5	82	44	18,5	161	19,5	13,8
K0268.131405	reamed hole with slot	125	5	36	14	138,5	82	44	18,5	161	19,5	16,3

Order No.	Version 1	A	D	H	H1	H2	H3	L	L2	SW
K0268.2108	square socket	80	24	84	47,5	29	13	104	13	8
K0268.2110	square socket	80	24	84	47,5	29	13	104	13	10
K0268.2210	square socket	100	29	104	58,5	36	13	129	16	10
K0268.2212	square socket	100	29	104	58,5	36	13	129	16	12
K0268.2312	square socket	125	36	138,5	82	44	18,5	161	19,5	12
K0268.2314	square socket	125	36	138,5	82	44	18,5	161	19,5	14

Crank handles balanced

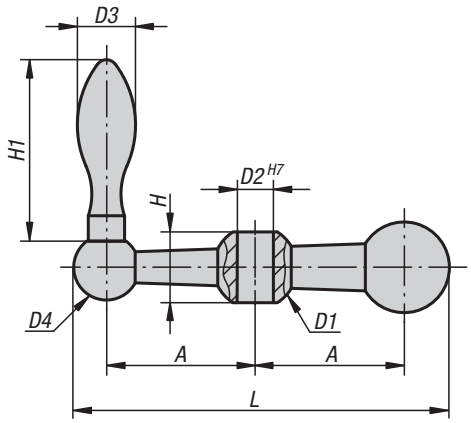

Material:
Steel.

Version:
Electro zinc-plated.

Sample order:
K0728.108

Note:
Fixed handle DIN 39.

KIPP Balanced handles

Order No.	A	D1	D2	D3	D4	H	H1	L
K0728.107	25	16	7	10	13	13	32	65,5
K0728.108	34	20	8	14	16	17	46	87
K0728.110	41	23	10	16	18	19,5	50	103,5
K0728.112	50	26	12	18	20	21,5	56	124

Notes

Cylindrical grips revolving

with hexagon socket

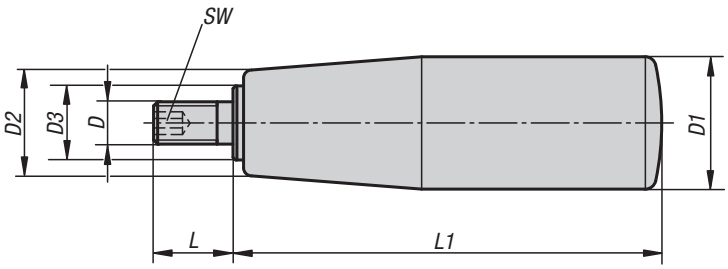

Material:
Grip thermoplastic.
Steel parts electro zinc-plated.

Version:
Black satin finished.

Sample order:
K0740.08230620

Note:
Cylindrical grips can be screwed onto our handwheels, crank handles etc.

KIPP Cylinder grips revolving with hexagon socket

Order No.	D	D1	D2	D3	L	L1	SW
K0740.06200520	M6	20	15	10	12	51	3
K0740.06230620	M6	23	18	10	12	62	3
K0740.08230620	M8	23	18	10	15	62	4
K0740.08250720	M8	25	19	10	15	71	4
K0740.10250720	M10	25	19	10	15	71	4
K0740.08250810	M8	26	22	14	15	81	4
K0740.10250810	M10	26	22	14	15	81	5
K0740.12260820	M12	26	22	14	15	81	5
K0740.10270930	M10	27	22	14	15	92	5
K0740.12270930	M12	27	22	14	15	92	5

Cylindrical grips revolving

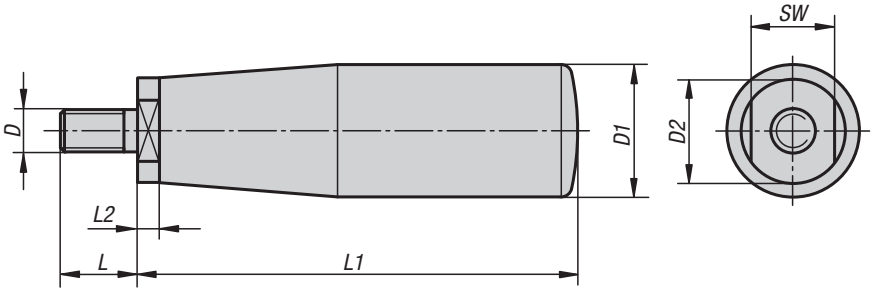

Material:
Grip thermoplastic.
Steel parts electro zinc-plated.

Version:
Black satin finished.

Sample order:
K0774.08230600

Note:
Cylindrical grips can be screwed onto our handwheels, crank handles etc.

KIPP Cylindrical revolving grips

Order No.	D	D1	D2	L	L1	L2	SW
K0774.06200500	M6	20	12	12	55	5	10
K0774.08230600	M8	23	14	15	67	7	13
K0774.08250690	M8	25	14	15	77	7	13
K0774.10250690	M10	25	14	15	77	7	13
K0774.10250800	M10	26	18	15	86	7	16
K0774.12250800	M12	26	18	15	86	7	16
K0774.10270890	M10	27	18	15	97	7	16
K0774.12270890	M12	27	18	15	97	7	16

Cylindrical grips fold-down

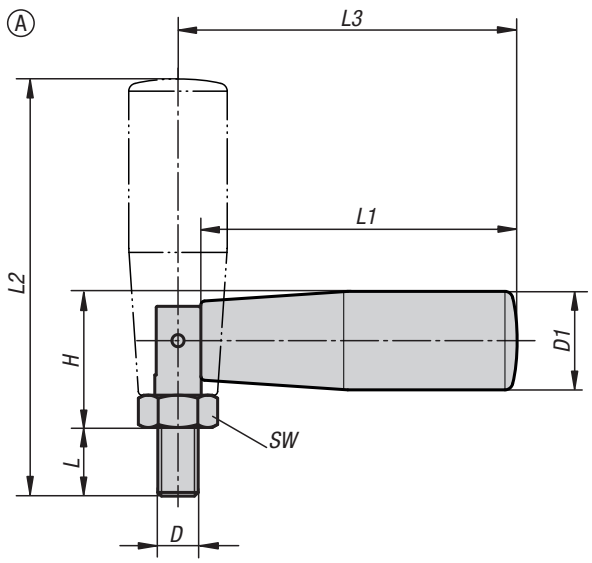

Material:
Grip thermoplastic.
Steel parts black oxidised.

Version:
Black satin finished.

Sample order:
K0775.10260890

Note:
Cylindrical grips can be screwed onto our handwheels, crank handles etc.

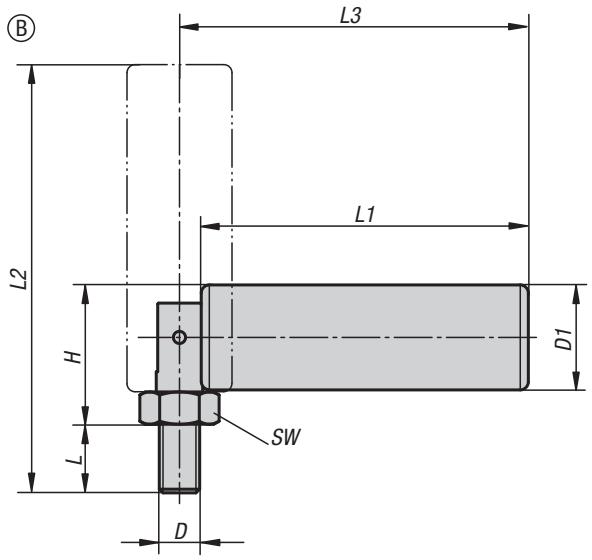

KIPP Cylindrical grips fold-down

Order No.	Form	D	D1	SW	L	L1	L2	L3	H
K0775.06200490	A	M6	20	10	9	49	63	53	24,5
K0775.08250690	A	M8	25	13	11	70	87,5	74	28
K0775.10260890	B	M10	26	17	16	90	114	96	34

Cylindrical grips revolving

stainless steel

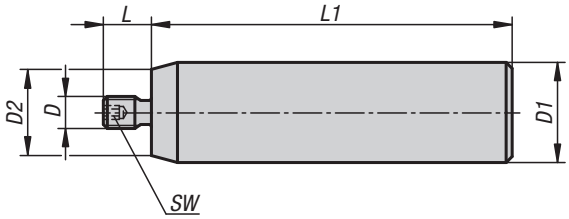

Material:
Axis and revolving grip stainless steel 1.4305.
Snap ring stainless steel 1.4310.

Version:
Bright.

Sample order:
K1000.105

Assembly:
Screw in using hexagon socket in axis.

KIPP Cylindrical grips, revolving, stainless steel

Order No.	D	D1	D2	L	L1	SW
K1000.105	M5	16	12,5	8	60	3
K1000.206	M6	20	16,5	9	72	3
K1000.308	M8	25	21,5	12	90	3

Cylindrical grips revolving

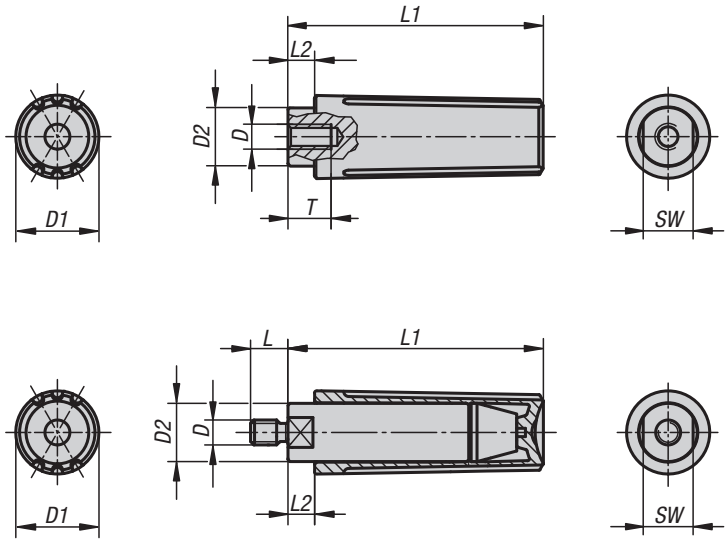

The harmonic interplay of form and function make these NOVO grip cylindrical grips to a universally applicable product. The quality is characterised by aesthetics, reliability and perfect handling.

Material:
Black grey thermoplastic.

Version:
Steel parts black oxidised.

Sample order:
K0263.104

Note:
Cylindrical grips are supplied assembled and can be screwed onto our handwheels, crank handles etc.

KIPP Cylindrical grips revolving with female thread

Order No.	D	D1	D2	L1	L2	T	SW
K0263.1104	M4	13	9	40	5	8	8
K0263.1205	M5	16	11	49,1	5,1	10	10
K0263.1306	M6	20	14	61,4	6,4	12	12
K0263.1408	M8	25	18	83	12,5	16	15

KIPP Cylindrical grips revolving with male thread

Order No.	D	D1	D2	L	L1	L2	SW
K0263.104	M4	13	9	6	40	5	8
K0263.205	M5	16	11	7,5	49,1	5,1	10
K0263.306	M6	20	14	9	61,4	6,4	12
K0263.408	M8	25	18	12	83	12,5	15

Cylindrical grips fold-down

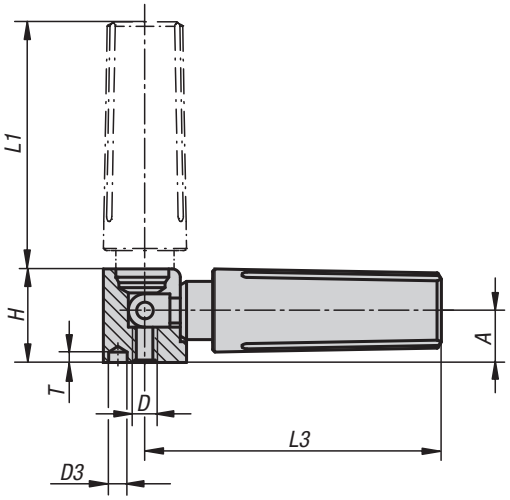

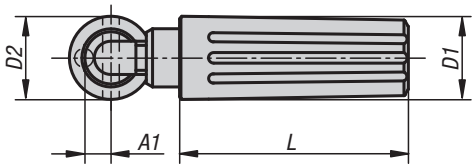

The harmonic interplay of form and function make these NOVO grip cylindrical grips to a universally applicable product. The quality is characterised by aesthetics, reliability and perfect handling.

Material:
Black grey thermoplastic.

Version:
Steel parts black oxidised.

Sample order:
K0264.104

Note:
The grips are supplied assembled and can be screwed to our handwheels, crank handles etc.
The hole D3 is used for positioning.

KIPP Cylindrical grips fold-down

Order No.	A	A1	D	D1	D2	D3	H	L	L1	L3	T
K0264.104	8	4,3	M4	13	13	2,5	14,5	35	40	47	4,5
K0264.205	10	5,3	M5	16	16	3,5	18	44	49	58	4,5
K0264.306	12,5	6,5	M6	20	20	4,5	22,5	55	59,5	71,5	6
K0264.408	16	9	M8	25	26	5,5	29	70,5	83,5	98,5	6,5

Cylindrical grips

safety automatic return

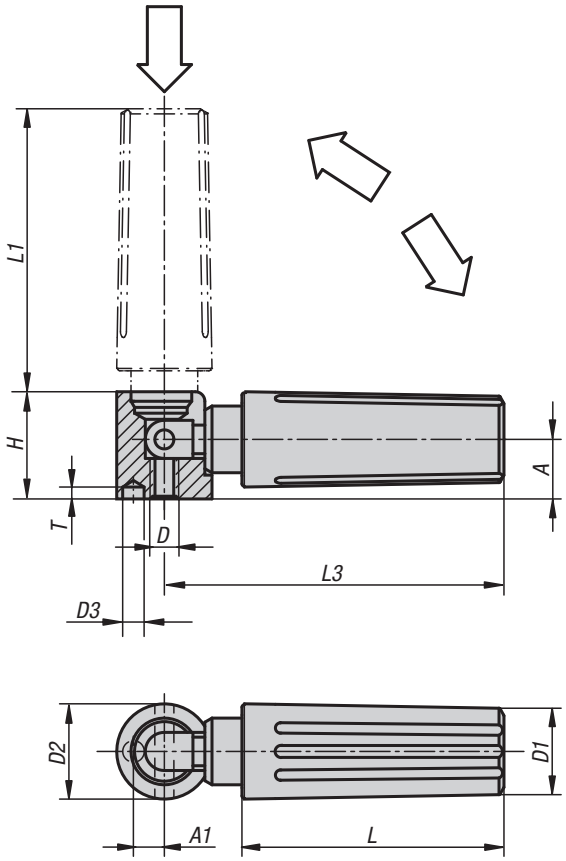

The characteristics of the standard cylindrical grip also apply to the automatic return safety cylindrical grip.
Optimum functionality and sophisticated safety technology are here ideally combined.

Material:
Grip black grey thermoplastic.

Version:
Steel parts black oxidised.

Sample order:
K0265.104

Note:
Two actions must be made to bring the safety grip into an operating position:
- Swing the grip out until it stops (90°).
- Push the grip in until it locks.
  The pushed-in position is the most comfortable for cranking. The grip swings back automatically after releasing.
  Cylindrical grips are supplied assembled and can be screwed onto our handwheels, crank handles etc.
  The hole D3 is used for positioning.

KIPP Cylindrical grips safety automatic return

Order No.	A	A1	D	D1	D2	D3	H	L	L1	L3	T
K0265.104	8	4,3	M4	13	13	2,5	14,5	35	38	47	4,5
K0265.205	10	5,3	M5	16	16	3,5	18	44	47,5	58	4,5
K0265.306	12,5	6,5	M6	20	20	4,5	22,5	55	58,5	71,5	6
K0265.408	16	9	M8	25	26	5,5	29	70,5	82	98,5	6,5

K0166

Machine handles fixed

steel, DIN 39 Form E

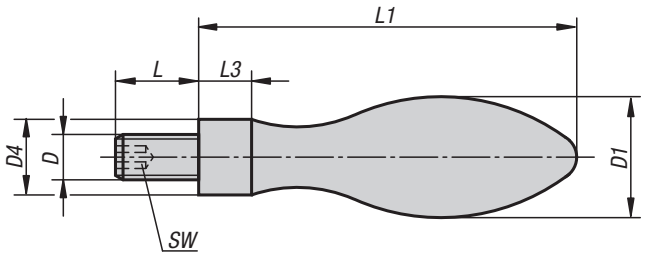

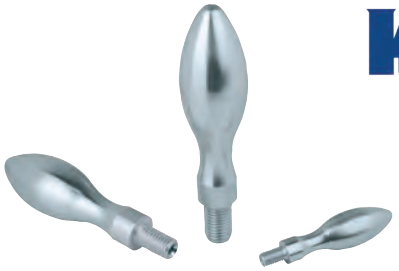

Material:
Grip and screw steel.

Version:
Grip and axle part trivalent blue passivated.

Sample order:
K0166.0616050

Note:
Machine handle suitable for DIN 950 handwheels.

KIPP Machine handles fixed, steel, DIN 39 Form E

Order No.	D	D1	D4	L	L1	L3	SW
K0166.0616050	M6	16	10	11	50	7	3
K0166.0820064	M8	20	13	13	64	8	4
K0166.1025080	M10	25	16	14	80	10	5
K0166.1232100	M12	32	20	21	100	13	6
K0166.1636112	M16	36	22	26	112	14	8

K1199

Machine handles fixed

DIN 39 Form E, stainless steel

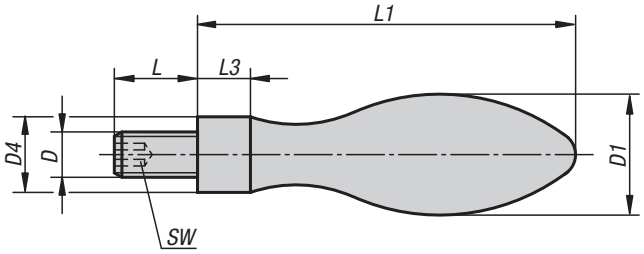

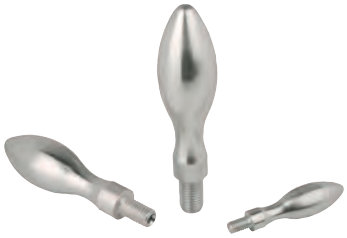

Material:
1.4305 or 1.4401 stainless steel.

Version:
Electropolished.

Sample order:
K1199.0616050

Note:
1.4401 stainless steel, similar to DIN 39.
Grip suitable for DIN 950 handwheels.

KIPP Machine handles, fixed, DIN 39 Form E, stainless steel

Order No.	Steel code	D	D1	D4	L	L1	L3	SW
K1199.0616050	**1.4305**	M6	16	10	11	50	7	3
K1199.0820064	**1.4305**	M8	20	13	13	64	8	4
K1199.1025080	**1.4305**	M10	25	16	14	80	10	5
K1199.10616050	**1.4401**	M6	16	11	13	51	5,1	3
K1199.10820064	**1.4401**	M8	21	14	14	67	8,75	4
K1199.11025080	**1.4401**	M10	25	16	18	81	9,75	5

K0167

Machine handles fixed

aluminium, DIN 39 Form E

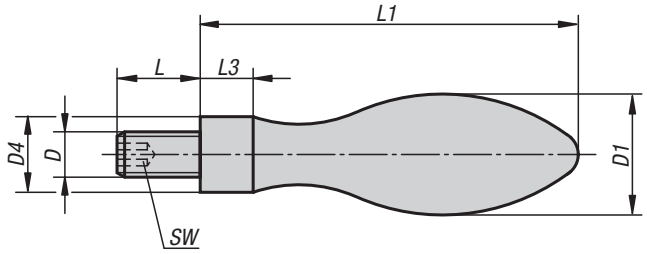

Material:
Grip aluminium.
Screw steel.

Version:
Grip polished.
Screw black.

Sample order:
K0167.0616050

Note:
Machine handle suitable for DIN 950 handwheels.

KIPP Machine handles fixed, aluminium, DIN 39 Form E

Order No.	D	D1	D4	L	L1	L3	SW
K0167.0616050	M6	16	10	11	50	7	3
K0167.0820064	M8	20	13	13	64	8	4
K0167.1025080	M10	25	16	14	80	10	5
K0167.1232100	M12	32	20	21	100	13	6
K0167.1636112	M16	36	22	26	112	14	8

K0168

Machine handles revolving

similar to DIN 98 Form E, steel

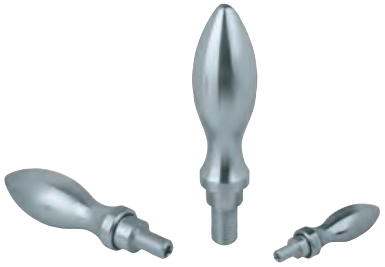

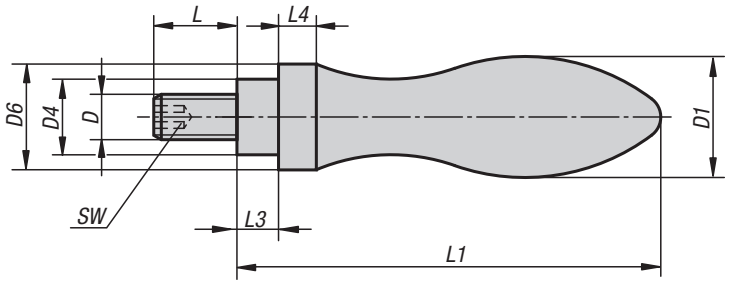

Material:
Grip and screw steel.

Version:
Grip and axle part trivalent blue passivated.

Sample order:
K0168.0616055

Note:
The handles with D1=25 mm and 32 mm have a thread length L2 that is shorter than the length specified in DIN 98. These machine handles are suitable for DIN 950 handwheels.

KIPP Machine handles revolving, similar to DIN 98 Form E, steel

Order No.	D	D1	D4	D6	L	L1	L3	L4	SW
K0168.0616055	M6	16	10	14	11	54,5	5,5	5	3
K0168.0820067	M8	20	13	18	13	67	6	6	4
K0168.1025083	M10	25	16	21	13	83	8	6,5	5
K0168.1232105	M12	32	20	26	16	105,5	10,5	8	6
K0168.1636117	M16	36	22	29	26	117	11	9	8

K1209

Machine handles revolving

similar to DIN 98 Form E, stainless steel

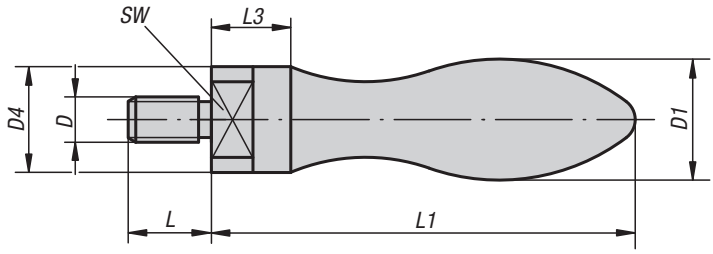

Material:
Stainless steel 1.4404.

Version:
Polished

Sample order:
K1209.10616050

Note:
Machine handle suitable for DIN 950 handwheels.

KIPP Machine handles, revolving, similar to DIN 98 Form E, stainless steel

Order No.	D	D1	D4	L	L1	L3	SW
K1209.10616050	M6	16	11	13	56	11	8
K1209.10820064	M8	20	13,5	14	72	13	10
K1209.11025080	M10	24	16	16	86	15	11

K0169

Machine handles revolving

aluminium, similar to DIN 98 Form E

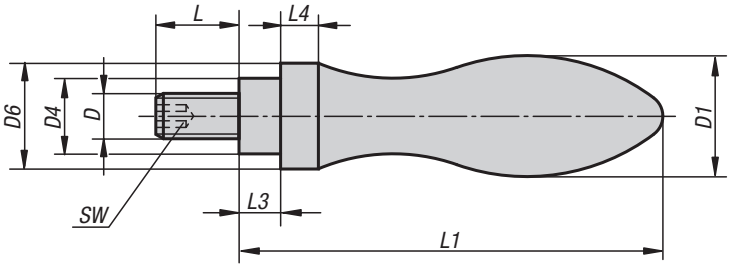

Material:
Grip aluminium.
Screw steel.

Version:
Grip polished.
Axle trivalent blue passivated.

Sample order:
K0169.0616055

Note:
Machine handle suitable for DIN 950 handwheels.

KIPP Machine handles revolving, aluminium, similar to DIN 98 Form E

Order No.	D	D1	D4	D6	L	L1	L3	L4	SW
K0169.0616055	M6	16	10	14	11	54,5	5,5	5	3
K0169.0820067	M8	20	13	18	13	67	6	6	4
K0169.1025083	M10	25	16	21	13	83	8	6,5	5
K0169.1232105	M12	32	20	26	16	105,5	10,5	8	6
K0169.1636117	M16	36	22	29	26	117	11	9	8

K1221

Taper grips fixed

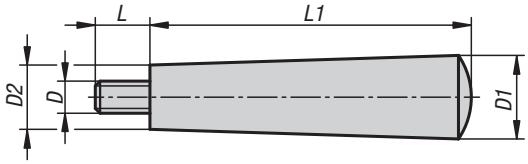

Material:
Black thermoset PF 31.
Screw electro zinc-plated steel.

Version:
High-gloss polished.

Sample order:
K1221.120408

KIPP Taper grips, fixed

Order No.	D	D1	D2	L	L1
K1221.120408	M4	12	9	8	40
K1221.150507	M5	15	11	7	50
K1221.180608	M6	18	13	8	64
K1221.210610	M6	21	15	10	72
K1221.210810	M8	21	15	10	72
K1221.250810	M8	25	17	10	90
K1221.261012	M10	26	20	12	100

K0170

Taper grips revolving

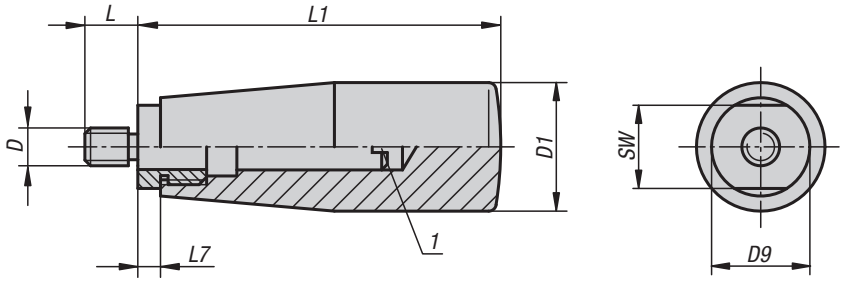

Material:
Black thermoset PF 31.
Centre pin and tapped bush electro zinc-plated steel or bright stainless steel.

Version:
High-gloss polished.

Sample order:
K0170.105007

Note:
To mount unscrew the axle.

Drawing reference:
1) mounting aid

KIPP Taper grips revolving

Order No. steel	Order No. stainless steel	D	D1	D9	L	L1	L7	SW
K0170.105007	**K0170.1105007**	M5	17	15	7	51	5	13
K0170.206008	**K0170.1206008**	M6	23	18	8	68	6	16
K0170.208009	**K0170.1208009**	M8	23	18	9	68	6	16
K0170.310011	**K0170.1310011**	M10	28	21	11	77	7	19

Taper grips revolving

oval

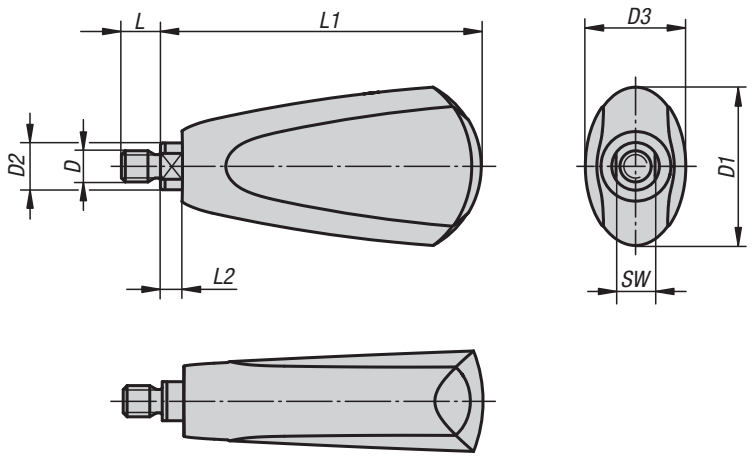

Material:
Thermoset PF 31, black.
Centre pin nickel-plated steel or bright 1.4305 stainless steel.
Snap ring 1.4310 stainless steel.

Version:
High-gloss polished.

Sample order:
K0651.106009

Note:
These grips are suitable as replacement handles for disc handwheels K0164.

KIPP Taper grips revolving, oval

Order No. steel	Order No. stainless steel	D	D1	D2	D3	L	L1	L2	SW
K0651.106009	**K0651.1106009**	M6	25	8	18	9	54,7	4,5	7
K0651.208010	**K0651.1208010**	M8	41	12	26	10	82,2	5,5	10

Notes

Taper grips

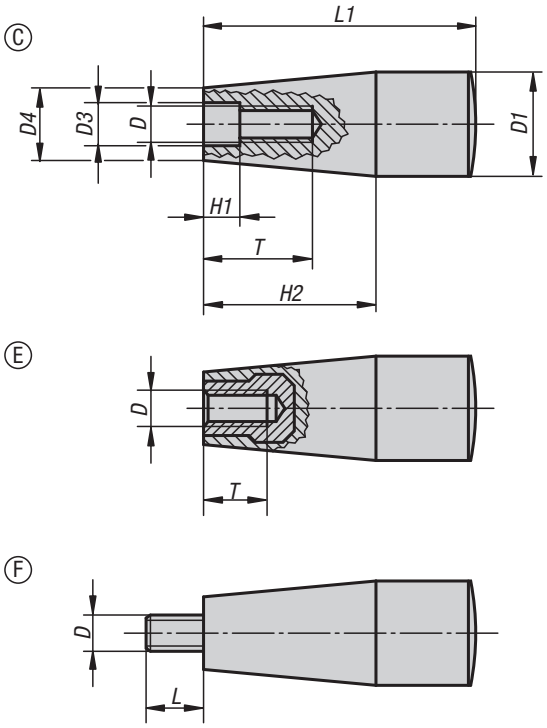

Material:
Thermoset PF 31, black.
Steel bush and stud, electro zinc-plated.

Version:
High-gloss polished.

Sample order:
K0172.106

Note:
The versions K0172.205 and K0172.206 have a brass bush.
The versions K0172.208 and K0172.2081 have a copper-plated steel bush.

On request:
Other colours.

Drawing reference:
Form C: moulded female thread
Form E: tapped bush
Form F: male thread

KIPP Taper grips with internal thread

Order No.	Form	D	D1	D3	D4	H1	H2	L1	T
K0172.106	C	M6	17	6,2	15	2	26	45	14
K0172.108	C	M8	17	8,2	13	2	26	45	16
K0172.1081	C	M8	23	8,5	18	2	38	61	24
K0172.110	C	M10	29	10,5	21	3,5	42	71	28
K0172.205	E	M5	17	-	15	-	26	45	10
K0172.206	E	M6	17	-	15	-	26	45	9
K0172.208	E	M8	23	-	18	-	38	61	14
K0172.2081	E	M8	28	-	21	-	42	71	14

KIPP Taper grips with external thread

Order No.	Form	D	D1	D4	H2	L	L1
K0172.306	F	M6	17	15	26	18	45
K0172.308	F	M8	23	18	38	12	61
K0172.310	F	M10	29	21	42	20	71

Tapered knobs

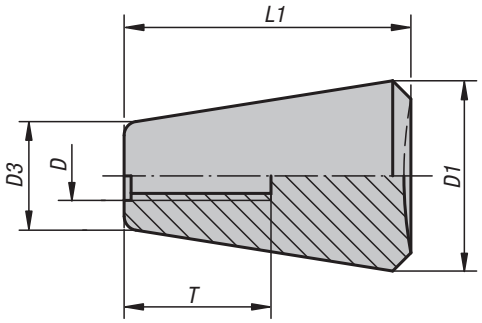

Material:
Black thermoset PF 31

Version:
Moulded thread.

Sample order:
K1207.06

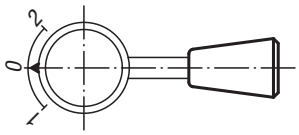

KIPP Tapered knobs

Order No.	D	D1	D3	L1	T
K1207.05	M5	20	12	30	15
K1207.061	M6	20	12	30	18
K1207.06	M6	25	15	38	19
K1207.081	M8	25	15	38	18
K1207.08	M8	30	18	46	16
K1207.101	M10	30	18	46	18
K1207.10	M10	35	21	53	19
K1207.12	M12	35	21	53	21

Conical knobs

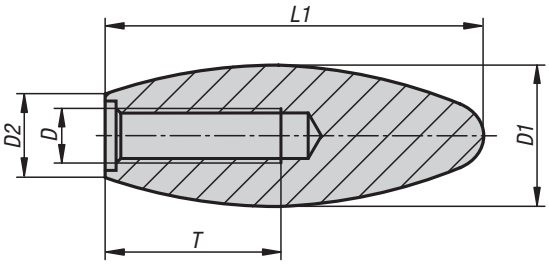

Material:
Black thermoset PF 31

Version:
High-gloss polished.

Sample order:
K1222.120

KIPP Conical knobs

Order No.	D	D1	D2	L1	T
K1222.050	M5	14	7	34	25
K1222.060	M6	23	14	60	17
K1222.080	M8	22	14	60	25
K1222.081	M8	26	16	70	19
K1222.100	M10	27	15,5	70	25
K1222.101	M10	35	22	85	25
K1222.120	M12	27	15,5	70	25
K1222.121	M12	35	22	85	25
K1222.160	M16	35	22	85	30

Conical grips

revolving

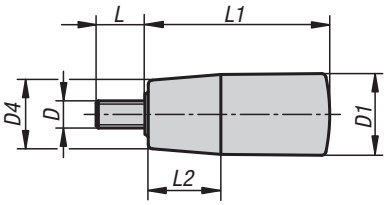

Material:
Thermoset PF 31, black.
Centre pin electro zinc-plated steel or bright stainless steel.

Version:
High-gloss polished.

Sample order:
K1201.10618

Note:
Cylindrical grips can be screwed onto our handwheels, crank handles etc.

KIPP Conical grip revolving

Order No. steel	Order No. stainless steel	D	D1	D4	L	L1	L2
K1201.0618	**K1201.10618**	M6	18	15	11	40,5	16
K1201.0823	**K1201.10823**	M8	23	19	13	65,5	24
K1201.1028	**K1201.11028**	M10	28	22	14	90,5	32

Taper grips

Ⓒ

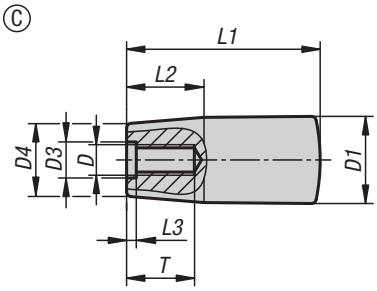

Ⓔ

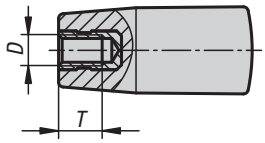

Ⓕ

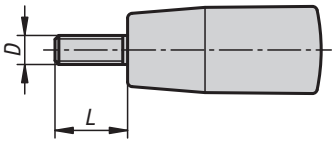

Material:
Thermoset PF 31, black.
Steel bush and stud, electro zinc-plated.

Version:
High-gloss polished.

Sample order:
K1202.10818

On request:
Other colours.

Drawing reference:
Form C: moulded female thread
Form E: tapped bush
Form F: male thread

KIPP Taper grips with female thread

Order No.	Form	D	D1	D3	D4	L1	L2	L3	T
K1202.10618	C	M6	18	6,2	15	40	16	2	14
K1202.10818	C	M8	18	8,5	15	40	16	2	18
K1202.10823	C	M8	23	8,5	19	65	24	2	18
K1202.11028	C	M10	28	10,5	22	90	32	3,5	22
K1202.20518	E	M5	18	-	15	40	16	-	7,5
K1202.20618	E	M6	18	-	15	40	16	-	9
K1202.20823	E	M8	23	-	19	65	24	-	12
K1202.20828	E	M8	28	-	22	90	32	-	12
K1202.21028	E	M10	28	-	22	90	32	-	15

KIPP Taper grips with male thread

Order No.	Form	D	D1	D4	L	L1	L2
K1202.30618	F	M6	18	15	15	40	16
K1202.30823	F	M8	23	19	15	65	24
K1202.31028	F	M10	28	22	15	90	32

Handwheel washers

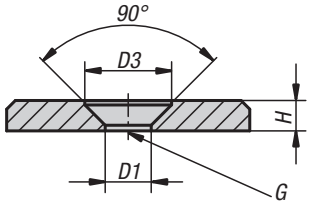

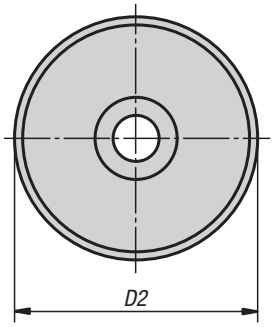

Material:
Steel 1.0718.
Stainless steel 1.4305.

Version:
Steel black oxidised.
Stainless steel bright.

Sample order:
K0173.00416

Note:
These washers are used together with DIN EN ISO 2009 or DIN EN ISO 10642 countersunk screws on the end of shafts with keyways to secure handwheels and crank handles.

The washers can be used with the handwheels K0671, K0160, K0161, K0162, K0163, K0164, K0165.

The steel washers are often used as caps for magnets.

Drawing reference:
D3 = for countersunk screw ISO 2009 and ISO 10642

1) countersunk screw ISO 2009 and ISO 10642
2) washer
3) handwheel
4) shaft

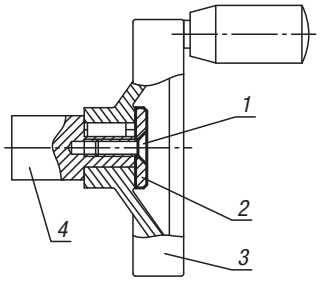

KIPP Handwheel washers

Order No. steel	Order No. stainless steel	D1	D2	D3	H	G
K0173.00310	K0173.10310	3,2	10	6	2	M3
K0173.00313	K0173.10313	3,2	13	6	2	M3
K0173.00416	K0173.10416	4,3	16	8,4	3	M4
K0173.00420	K0173.10420	4,3	20	8,4	3	M4
K0173.00522	K0173.10522	5,3	22	10	3,5	M5
K0173.00525	K0173.10525	5,3	25	10	3,5	M5
K0173.00528	K0173.10528	5,3	28	10	3,5	M5
K0173.00632	K0173.10632	6,4	32	12	4	M6
K0173.00636	K0173.10636	6,4	36	12	4	M6
K0173.00640	K0173.10640	6,4	40	12	5	M6
K0173.00645	K0173.10645	6,4	45	12	6	M6
K0173.00652	K0173.10652	6,4	52	12	6	M6

Notes

Position indicators

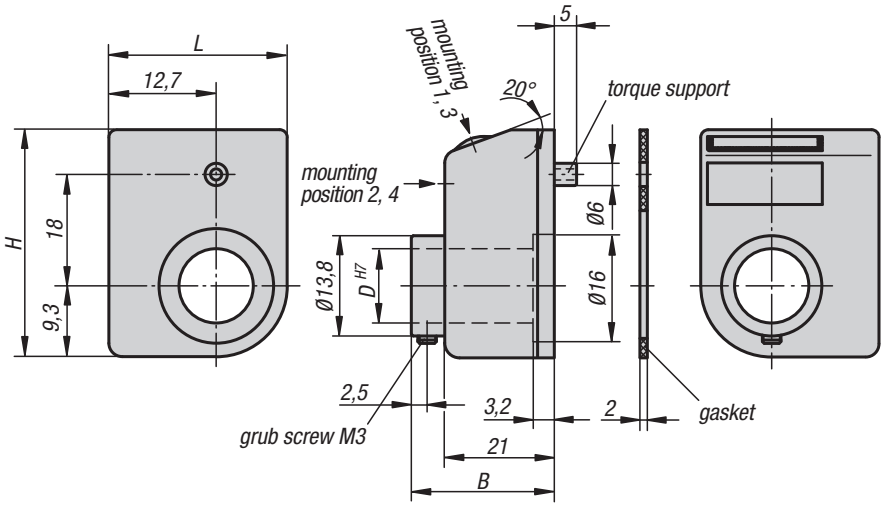

Material:
Housing polyamide 6.
Hollow shaft steel.
Screen plastic.
Grub screw steel.

Version:
Impact-resistant housing.
Hollow shaft black oxidised.
Grub screw black.
Dial black, digits white.

Sample order:
K0408.01001111
(Position indicator with 1 mm pitch, decimal point in first position from the right, assembly position 1, direction of count ascending clockwise, colour orange)

Note:
Position indicators allow direct reading of input measurement values at a glance.
In addition, the value indicated per spindle rotation (corresponding spindle pitch) can be selected and the various indicator values are realised by a transmission gear. The position indicators are distinguished by their small construction with very clear display.
They are especially suitable for small spindle distances and small shaft diameters and have a torque support that is positioned in a hole on the side.

** At the 1st asterisk give assembly position and at the 2nd asterisk give the count direction (see sample order "assembly position, count direction").

On request:
– Stainless steel driveshaft
– Indicator for inch

Accessories:
– Reducing bushes K0412

Technical data:
– Counter consisting of 3 10-position dials
– Height of figures about 4 mm
– Hollow shaft Ø 10 H7 mm
– Temperature resistant to 80 °C
– Oil and solvent resistant

Display after one rotation, with decimal point:	Mounting position (1 - 4):
e. g. K0408.**01001**111 **0100** = 1mm increments **1** = decimal places	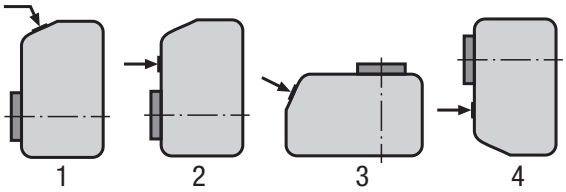 e. g. K0408.01001**1**11 = mounting position **1**

Count direction (1 - 2):	Colour (1 - 2):
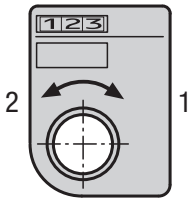 e. g. K0408.01001**1**1 **1** = clockwise (ascending values) **2** = anticlockwise (ascending values)	e. g. K0408.01001111 **1** = orange **2** = black

KIPP Position indicators

Order No. orange RAL 2004	Order No. black	B	D	H	L	Pitch	Indicator after one rotation	Decimal point in position	Max. rpm
K0408.010011**	**K0408.01001**2**	26	10	33	22	1	01,0	1	500
K0408.020011**	**K0408.02001**2**	26	10	33	22	2	02,0	1	500
K0408.025011**	**K0408.02501**2**	26	10	33	22	2,5	02,5	1	500
K0408.030011**	**K0408.03001**2**	26	10	33	22	3	03,0	1	500
K0408.040011**	**K0408.04001**2**	26	10	33	22	4	04,0	1	375
K0408.050011**	**K0408.05001**2**	26	10	33	22	5	05,0	1	300
K0408.060011**	**K0408.06001**2**	26	10	33	22	6	06,0	1	250
K0408.080011**	**K0408.08001**2**	26	10	33	22	8	08,0	1	180
K0408.100011**	**K0408.10001**2**	26	10	33	22	10	10,0	1	150

Position indicators

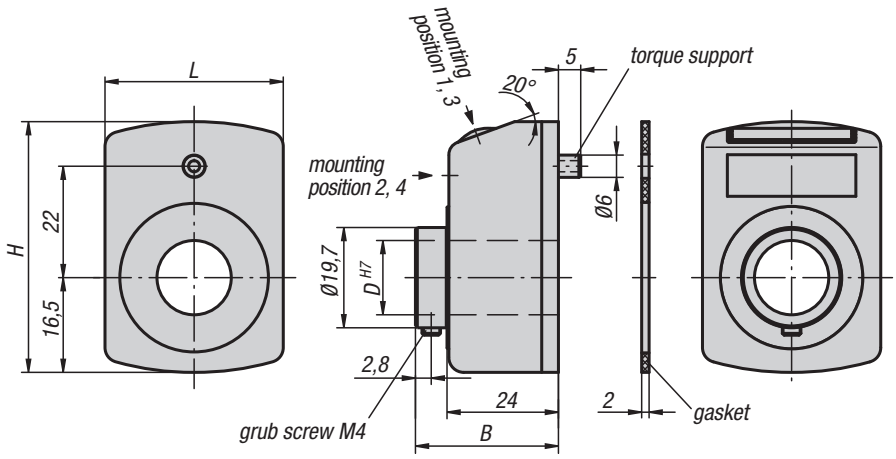

Display after one rotation, with decimal point:	Mounting position (1 - 4):
	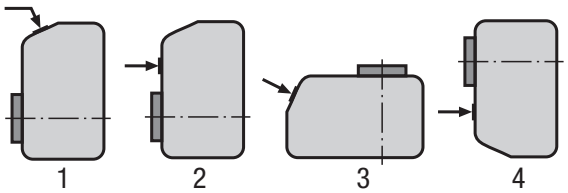
e. g. K0409.**01002**111 **0100** = 1 mm increments **2** = decimal places	e. g. K0409.01002**1**11 = mounting position **1**

Count direction (1 - 2):	Colour (1 - 2):
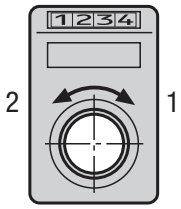	
e. g. K0409.01002**1**1 **1** = clockwise (ascending values) **2** = anticlockwise (ascending values)	e. g. K0409.0100211**1** **1** = orange **2** = black

KIPP Position indicators

Order No. orange RAL 2004	Order No. black	B	D	H	L	Pitch	Indicator after one rotation	Decimal point in position	Max. rpm
K0409.01002**1	K0409.01002**2	31	14	47	33	1	00,10	2	500
K0409.01001**1	K0409.01001**2	31	14	47	33	1	001,0	1	500
K0409.01251**1	K0409.01251**2	31	14	47	33	1,25	001,2/5	1	500
K0409.01501**1	K0409.01501**2	31	14	47	33	1,5	001,5	1	500
K0409.02001**1	K0409.02001**2	31	14	47	33	2	002,0	1	500
K0409.02501**1	K0409.02501**2	31	14	47	33	2,5	002,5	1	500
K0409.03001**1	K0409.03001**2	31	14	47	33	3	003,0	1	500
K0409.04001**1	K0409.04001**2	31	14	47	33	4	004,0	1	375
K0409.05001**1	K0409.05001**2	31	14	47	33	5	005,0	1	300
K0409.06001**1	K0409.06001**2	31	14	47	33	6	006,0	1	250
K0409.08001**1	K0409.08001**2	31	14	47	33	8	008,0	1	180
K0409.10001**1	K0409.10001**2	31	14	47	33	10	010,0	1	150

Material:
Housing polyamide 6.
Hollow shaft steel.
Screen plastic.
Grub screw steel.

Version:
Impact-resistant housing.
Hollow shaft black oxidised.
Grub screw black.
Dial black, digits white.

Sample order:
K0409.01002111
(Position indicator with 1 mm pitch, decimal point in second position from the right, assembly position 1, direction of count ascending clockwise, colour orange)

Note:
Position indicators allow direct reading of input measurement values at a glance.
In addition, the value indicated per spindle rotation (corresponding spindle pitch) can be selected and the various indicator values are realised by a transmission gear. The position indicators are distinguished by their small construction with very clear display and fine scale.
They are especially suitable for small spindle distances and small shaft diameters and have a torque support that is positioned in a hole on the side.

** At the 1st asterisk give assembly position and at the 2nd asterisk give the count direction (see sample order “assembly position, count direction”).

On request:
– Counter cover made of mineral glass
– Stainless steel driveshaft
– Axial sealing (dust-proof)
– Vibration protection

Accessories:
– Reducing bushes K0412
– Insert plate K0413
– Mounting plates K0414

Technical data:
– Counter consisting of 4 10-position dials + fine scale
– Height of figures about 6 mm
– Hollow shaft Ø 14 H7 mm
– Temperature resistant to 80 °C
– Oil and solvent resistant

Position indicators

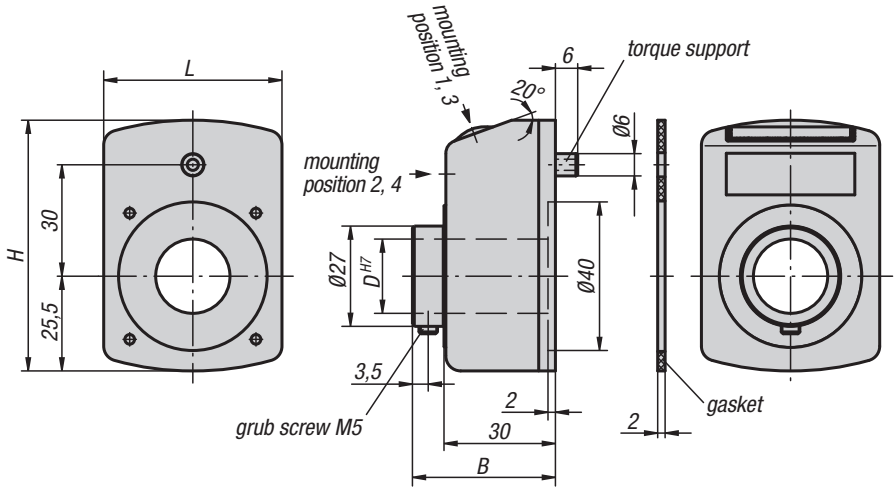

Material:
Housing polyamide 6.
Hollow shaft steel.
Screen plastic.
Grub screw steel.

Version:
Impact-resistant housing.
Hollow shaft black oxidised.
Grub screw black.
Dial black, digits white.

Sample order:
K0410.01002111
(Position indicator with 1 mm pitch, decimal point in second position from the right, assembly position 1, direction of count ascending clockwise, colour orange)

Note:
Position indicators allow direct reading of input measurement values at a glance.
In addition the value indicated per spindle rotation (corresponding spindle pitch) can be selected and the various indicator values are realised by a transmission gear.
The position indicators are distinguished by their very clear display and fine scale. They have a torque support that is positioned in a hole on the side.

** At the 1st asterisk give assembly position and at the 2nd asterisk give the count direction (see sample order "assembly position, count direction").

On request:
– Counter cover made of mineral glass
– Stainless steel driveshaft
– Axial sealing (dust-proof)
– Waterproof
– Vibration protection

Accessories:
– Reducing bushes K0412
– Insert plate K0413
– Mounting plates K0414

Technical data:
– Counter consisting of 5 10-position dials + fine scale
– Height of figures about 7 mm
– Hollow shaft Ø 20 H7 mm
– Temperature resistant to 80 °C
– Oil and solvent resistant
– Dust-proof

Display after one rotation, with decimal point:	Mounting position (1 - 4):
	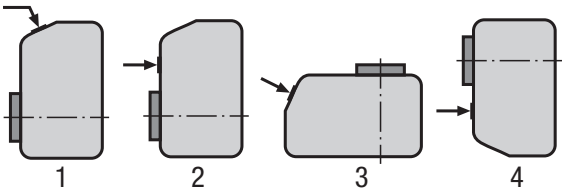
e. g. K0410.**01002**111 **0100** = 1 mm increments **2** = decimal places	e. g. K0410.01002**1**11 = mounting position **1**

Count direction (1 - 2):	Colour (1 - 2):
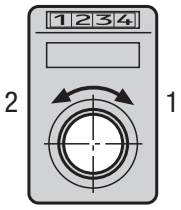	
e. g. K0410.01002111 **1** = clockwise (ascending values) **2** = anticlockwise (ascending values)	e. g. K0410.01002111 **1** = orange **2** = black

KIPP Position indicators

Order No. orange RAL 2004	Order No. black	B	D	H	L	Pitch	Indicator after one rotation	Decimal point in position	Max. rpm
K0410.010021**	**K0410.01002**2**	38,5	20	67,5	48	1	000,10	2	500
K0410.010011**	**K0410.01001**2**	38,5	20	67,5	48	1	0001,0	1	500
K0410.015011**	**K0410.01501**2**	38,5	20	67,5	48	1,5	0001,5	1	500
K0410.020011**	**K0410.02001**2**	38,5	20	67,5	48	2	0002,0	1	500
K0410.025011**	**K0410.02501**2**	38,5	20	67,5	48	2,5	0002,5	1	500
K0410.030011**	**K0410.03001**2**	38,5	20	67,5	48	3	0003,0	1	500
K0410.040011**	**K0410.04001**2**	38,5	20	67,5	48	4	0004,0	1	450
K0410.050011**	**K0410.05001**2**	38,5	20	67,5	48	5	0005,0	1	300
K0410.060011**	**K0410.06001**2**	38,5	20	67,5	48	6	0006,0	1	250
K0410.100011**	**K0410.10001**2**	38,5	20	67,5	48	10	0010,0	1	150

Position indicators

freely programmable

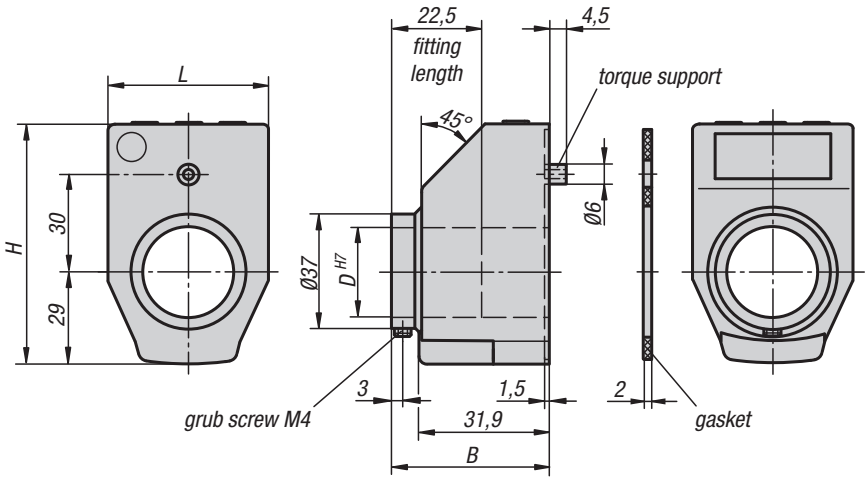

Material:
Housing plastic.
Hollow shaft steel.
Screen LCD display.
Grub screw steel.

Version:
Hollow shaft black oxidised.
Grub screw black.

Sample order not programmed:
K0411.12
(Position indicator with assembly position 1, colour black)

Sample order programmed:
K0411.0200021120
(See ordering example on the next page)

Note:
The electronic position indicators offer diverse opportunities compared to mechanical position indicators because they display angles as well as uncommon spindle pitches and record each fraction of spindle movement.

* Freely programmable parameters using the programming software K0411.09.

Technical data:
– LCD Display with 5 digits
– Digit size approx. 11.5 mm
– Display range from -19999 ... 99999
– Tunular shaft Ø 30 H7 mm
– Operating temperature -10 °C to +60 °C
– Storage temperature -30 °C to +80 °C
– Revolution max. 600 rpm
– Lithium battery Button cell 3V, type CR 2032. service life approx. 2 years
– Vibration-resistance according to DIN IEC 68-2-6 10 g / (5 ... 150 Hz), 20 g / (100 ... 2000 Hz)
– Shock-resistance according to DIN IEC 68-2-27 30 g / 15 ms
– EMC DIN EN 61000-4-2; DIN EN 61000-4-4
– Type of protection IP 51

Features:
– indicated value and decimal point freely programmable
– linear or angle mode
– function key for zero-point position
– function key for switching between the absolute dimension and chain dimension
– programming of an offset value directly at the device
– easy battery change

Accessories:
– reducing bushes K0412
– programming software K0411.09

KIPP Position indicators programmed

Order No.	Version	B	D	H	L
K0411.	See sample order for position Indicators programmed	38,8	30	71	48

KIPP Position indicators not programmed*

Order No.	Assembly position	Main colour	Version 2	Order No. software
K0411.11	1	orange	freely programmable	K0411.09
K0411.12	1	black	freely programmable	K0411.09
K0411.31	3	orange	freely programmable	K0411.09
K0411.32	3	black	freely programmable	K0411.09

Position indicators

freely programmable

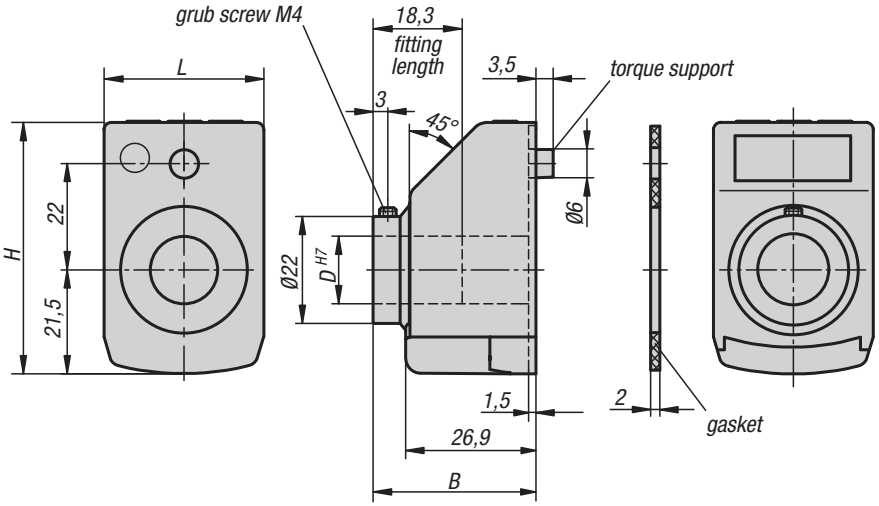

Material:
Housing plastic.
Hollow shaft steel.
Screen LCD display.
Grub screw steel.

Version:
Hollow shaft black oxidised.
Grub screw black.

Sample order not programmed:
K0771-12
(position indicator with assembly position 1, colour black)

Sample order programmed:
K0771.0200021120
(see sample order on following page)

Note:
The electronic position indicators offer diverse opportunities compared to mechanical position indicators because they display angles as well as uncommon spindle pitches and record each fraction of spindle movement.

* Freely programmable parameters using the programming software K0411.09.

Technical data:
– LCD Display with 5 digits
– Digit size approx. 8 mm
– Display range from -19999 ... 99999
– Hollow shaft Ø 14 H7 mm
– Operating temperature -10 °C to +60 °C
– Storage temperature -30 °C to +80 °C
– Revolution max. 600 rpm
– Lithium battery button cell 3V, type CR 2032. service life ca. 2 years
– Vibration-resistance acc. to DIN IEC 68-2-6 10 g / (5 ... 150 Hz), 20 g / (100 ... 2000 Hz)
– Shock-resistance acc. to DIN IEC 68-2-27 30 g / 15 ms
– EMC DIN EN 61000-4-2; DIN EN 61000-4-4
– Protection IP 51

Features:
– indicated value and decimal point freely programmable
– linear or angle mode
– function key for zero-point position
– function key for switching between the absolute dimension and chain dimension
– programming of an offset value directly at the device
– easy battery change

Accessories:
– reducing bushes K0412
– programming software K0411.09

KIPP Position indicators programmed

Order No.	Version	B	D	H	L
K0771.	See sample order for position Indicators programmed	33,6	14	52	33

KIPP Position indicators not programmed*

Order No.	Assembly position	Main colour	Version 2	Order No. software
K0771.11	1	orange	freely programmable	K0411.09
K0771.12	1	black	freely programmable	K0411.09
K0771.31	3	orange	freely programmable	K0411.09
K0771.32	3	black	freely programmable	K0411.09

Sample order for programmed position indicators K0411 and K0771

Order code:

K0411._ _ _ \

K0412

Reducing bushings

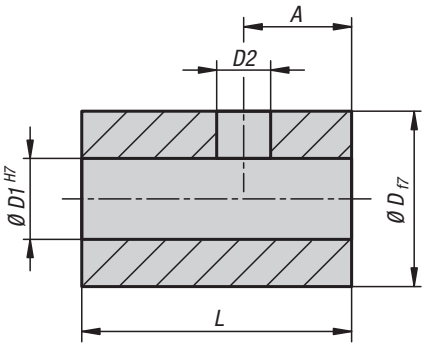

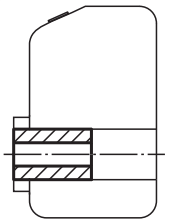

Material:
Steel.

Version:
Black oxidised.

Sample order:
K0412.14**08** (diameter D1=8)

Note:
Reducing bushes are used for adapting the diameter between position indicator and positioning spindle.

KIPP Reducing bushings

Order No.	A	D	D1	D2	L	Suitable for position indicator
K0412.10**	2,5	10	6/8	3,2	14	K0408
K0412.14**	3,5	14	6/8/10/12	4,2	17	K0409
K0412.20**	4,5	20	12/14/16/18	5,5	20	K0410
K0412.30**	4	30	12/14/16/18/20/25	5,5	30	K0411

K0413

Intermediate plates

K0413.041

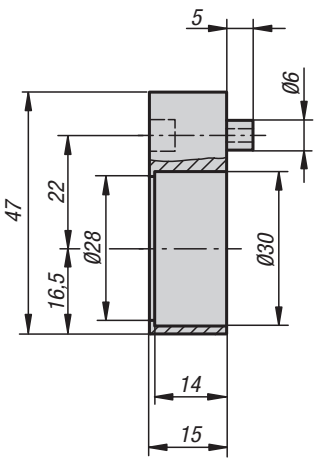

K0413.091

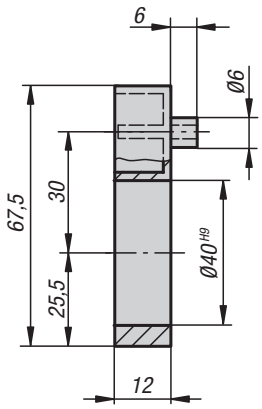

Material:
Plastic

Sample order:
K0413.041

Note:
Intermediate plates are used for mounting shaft collars and radial shaft seals.

KIPP Intermediate plates

Order No.	Suitable for position indicator
K0413.041	K0409, K0771
K0413.091	K0410, K0411

Mounting brackets

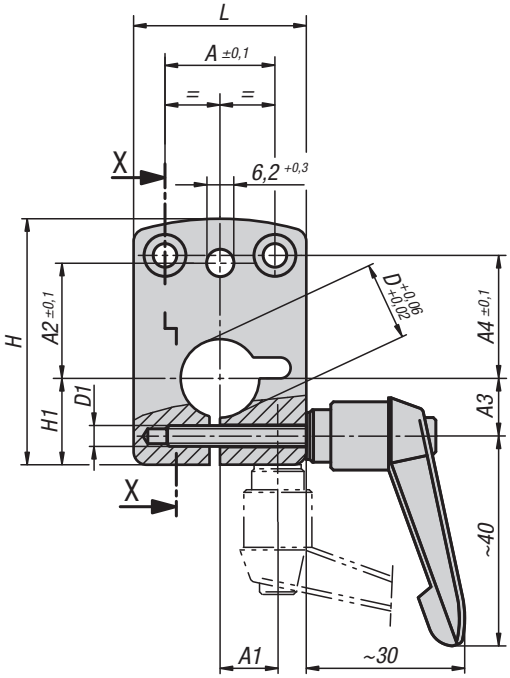

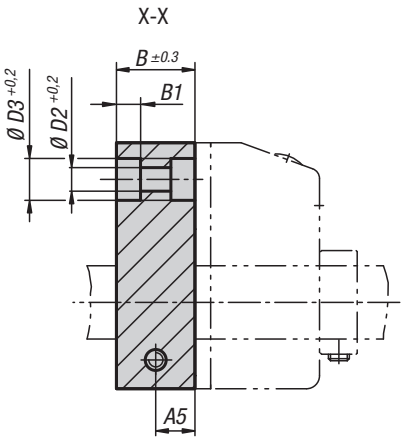

Material:
Mounting position 1, housing die-cast zinc
Mounting position 3, housing aluminium.

Clamping lever plastic.

Version:
Housing anodised.
Clamping lever black grey.

Sample order:
K0414.09121

Note:
Mounting brackets and position indicators form a compact unit. The brackets guarantee reliable spindle clamping without additional construction work.
The simple assembly allows the retrofitting on existing equipment.

Mounting position

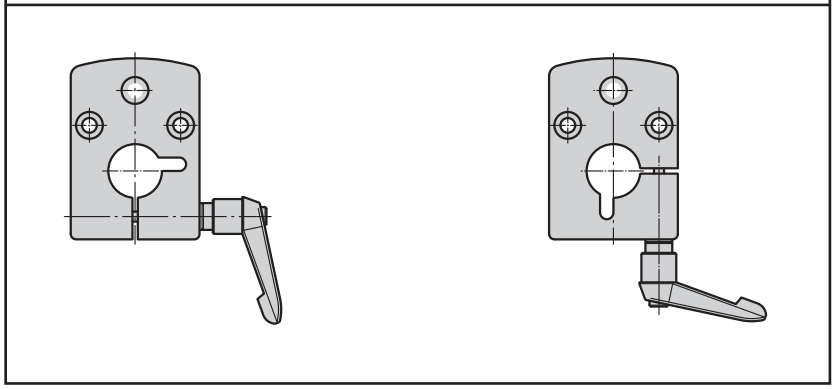

K0414. ....**1** K0414. ....**3**

KIPP Mounting brackets

Order No. mounting position 1	Order No. mounting position 3	A	A1	A2	A3	A4	A5	B	B1	D	D1	D2	D3	H	H1	L	Suitable for position indicator
K0414.04081	**K0414.04083**	21	-/11	22	11/-	23,5	7,5	15	4,6	8	M4	4,5	8	47	16,5	33	K0409
K0414.04101	**K0414.04103**	21	-/11	22	11/-	23,5	7,5	15	4,6	10	M4	4,5	8	47	16,5	33	K0409
K0414.04121	**K0414.04123**	21	-/11	22	11/-	23,5	7,5	15	4,6	12	M4	4,5	8	47	16,5	33	K0409
K0414.04141	**K0414.04143**	21	-/11	22	11/-	23,5	7,5	15	4,6	14	M4	4,5	8	47	16,5	33	K0409
K0414.09121	**K0414.09123**	34	-/17	30	17/-	17	10	20	5,5	12	M5	5,5	10	67,5	25,5	48	K0410
K0414.09141	**K0414.09143**	34	-/17	30	17/-	17	10	20	5,5	14	M5	5,5	10	67,5	25,5	48	K0410
K0414.09161	**K0414.09163**	34	-/17	30	17/-	17	10	20	5,5	16	M5	5,5	10	67,5	25,5	48	K0410
K0414.09201	**K0414.09203**	34	-/17	30	17/-	17	10	20	5,5	20	M5	5,5	10	67,5	25,5	48	K0410