Grippers, tool steel, rectangular with counterbore

Item description/product images

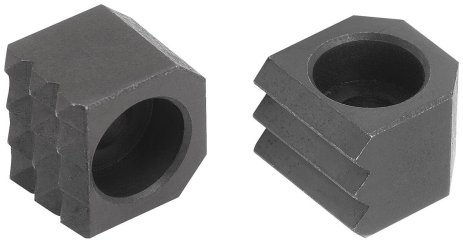

Description

Product description:
Grippers and inserts are perfect for use in clamping arms, gripper systems, clamping fixtures, clamping jaws and jaw plates. Grippers can be used to transfer the highest torques and above-average clamping forces, even with hard materials and surface irregularities.

Material:
Tool steel.

Version:
Hardened, black oxidised.

Accessory:
K0929 Side clamp.
K0930 Side clamp.
K0931 Side clamp with rest pads.
K1159 Socket head screws, thread up to head DIN 912.
K1160 Socket head screws, low profile head DIN 6912.
K0869 Socket head screws, DIN EN ISO 4762 extended, steel or stainless steel.

Drawing reference:
Form A: serrated
Form B: wedge shaped

Drawings

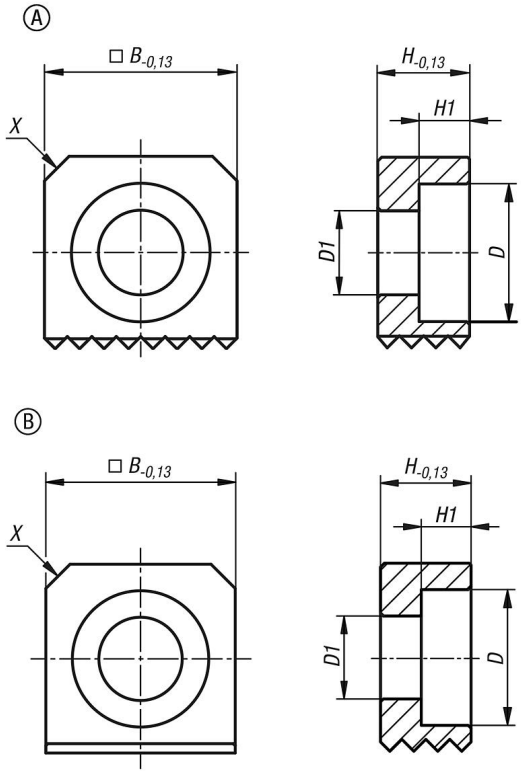

Grippers, tool steel, rectangular with counterbore

Overview of items

Grippers, tool steel, rectangular with counterbore

Order No.	Form	Version 1	B	H	H1	D	D1	for screws	Serration	X
K2241.12061	A	Ball Knob	12	6	4,06	8	4,5	M4	0,27	2,3x45°
K2241.12101	A	Ball Knob	12	10	4,06	8	4,5	M4	0,27	2,3x45°
K2241.12121	A	Ball Knob	12	12	4,06	8	4,5	M4	0,27	2,3x45°
K2241.16061	A	Ball Knob	16	6	4,2	11	6,6	M6	0,27	3,2x45°
K2241.16101	A	Ball Knob	16	10	4,2	11	6,6	M6	0,27	3,2x45°
K2241.16121	A	Ball Knob	16	12	4,2	11	6,6	M6	0,27	3,2x45°
K2241.20061	A	Ball Knob	20	6	5,08	15	9	M8	0,27	3,2x45°
K2241.20101	A	Ball Knob	20	10	5,08	15	9	M8	0,27	3,2x45°
K2241.20121	A	Ball Knob	20	12	5,08	15	9	M8	0,27	3,2x45°
K2241.25101	A	Ball Knob	25	10	6,6	18	11	M10	0,27	3,2x45°
K2241.25121	A	Ball Knob	25	12	6,6	18	11	M10	0,27	3,2x45°
K2241.12062	B	dk0186	12	6	4,06	8	4,5	M4	0,27	2,3x45°
K2241.12102	B	dk0186	12	10	4,06	8	4,5	M4	0,27	2,3x45°
K2241.12122	B	dk0186	12	12	4,06	8	4,5	M4	0,27	2,3x45°
K2241.16062	B	dk0186	16	6	4,2	11	6,6	M6	0,27	3,2x45°
K2241.16102	B	dk0186	16	10	4,2	11	6,6	M6	0,27	3,2x45°
K2241.16122	B	dk0186	16	12	4,2	11	6,6	M6	0,27	3,2x45°
K2241.20062	B	dk0186	20	6	5,08	15	9	M8	0,27	3,2x45°
K2241.20102	B	dk0186	20	10	5,08	15	9	M8	0,27	3,2x45°
K2241.20122	B	dk0186	20	12	5,08	15	9	M8	0,27	3,2x45°
K2241.25102	B	dk0186	25	10	6,6	18	11	M10	0,27	3,2x45°
K2241.25122	B	dk0186	25	12	6,6	18	11	M10	0,27	3,2x45°

© HEINRICH KIPP WERK GmbH & Co. KG