Material handling

Ring bolts

DIN 580

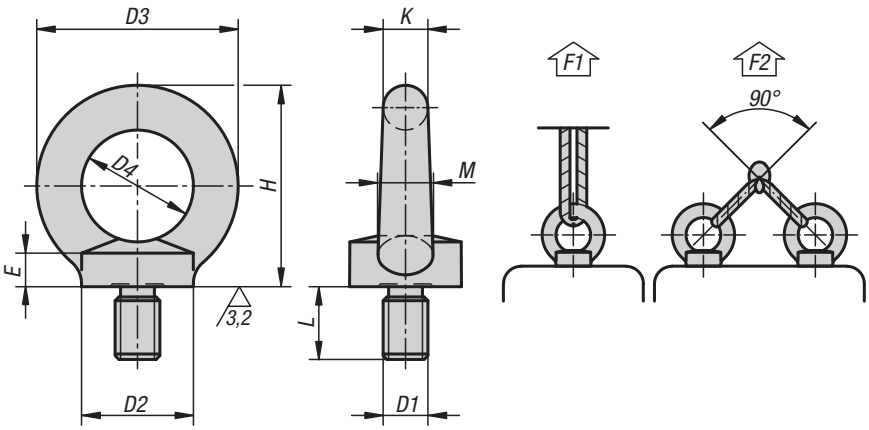

Material:
1.1141 steel, 1.4301 stainless steel or 1.4401 stainless steel.

Version:
drop forged.

Sample order:
K0767.20

Note:
For high demand hoisting and carrying tasks in safety-relevant areas (machine construction, load handling equipment, lifting tackle).
The CE mark is impressed into the ring bolt.
F2 permissible load under max. 45° per ring bolt.

On request:
Certificate of conformity.

KIPP Ring bolts DIN 580

Order No. steel 1.1141	Order No. stainless steel 1.4301	Order No. stainless steel 1.4401	D1	L	D2	D3	D4	E	H	K	M	F1 max. kN	F2 max. kN	Permissible load kg
K0767.08	**K0767.108**	**K0767.208**	M8	13	20	36	20	6	36	8	10	1,4	0,95	96,9
K0767.10	**K0767.110**	**K0767.210**	M10	17	25	45	25	8	45	10	12	2,3	1,7	173,4
K0767.12	**K0767.112**	**K0767.212**	M12	20,5	30	54	30	10	53	12	14	3,4	2,4	244,8
K0767.16	**K0767.116**	**K0767.216**	M16	27	35	63	35	12	62	14	16	7	5	510
K0767.20	**K0767.120**	**K0767.220**	M20	30	40	72	40	14	71	16	19	12	8,3	846,6
K0767.24	**K0767.124**	**K0767.224**	M24	36	50	90	50	18	90	20	24	18	12,7	1295,4

Ring bolts

similar to DIN 580

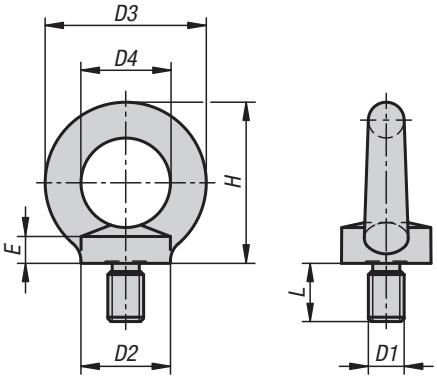

Material:
Stainless steel 1.4401.

Version:
Bright.

Sample order:
K1333.08

KIPP Ring bolts similar to DIN 580

Order No.	D1	D2	D3	D4	E	H	L
K1333.08	M8	20	36	20	6	36	13
K1333.10	M10	25	45	25	8	45	17
K1333.12	M12	30	54	30	10	53	20,5
K1333.16	M16	35	63	35	12	62	27
K1333.20	M20	40	72	40	14	71	30

Ring nuts

DIN 582

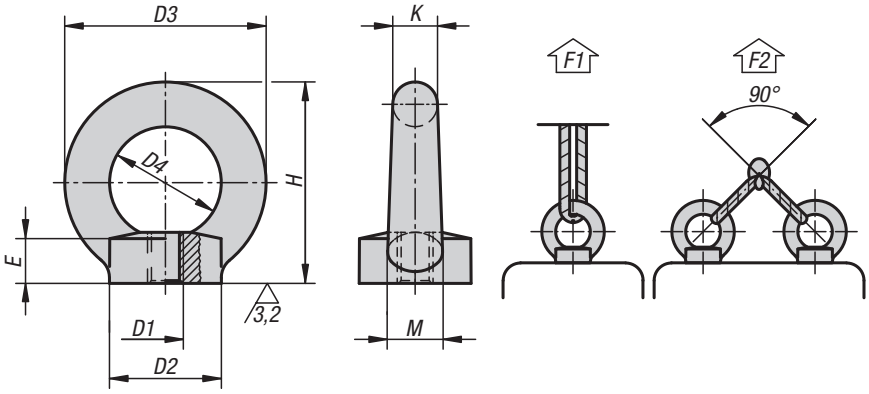

Material:
1.1141 steel, 1.4301 stainless steel or 1.4401 stainless steel.

Version:
drop forged.

Sample order:
K0768.10

Note:
For high demand hoisting and carrying tasks in safety-relevant areas (machine construction, load handling equipment, lifting tackle).
The CE mark is impressed into the ring bolt.
F2 permissible load under max. 45° per ring bolt.

On request:
Certificate of conformity.

KIPP Ring nuts DIN 582

Order No. steel 1.1141	Order No. stainless steel 1.4301	Order No. stainless steel 1.4401	D1	D2	D3	D4	E	H	K	M	F1 max. kN	F2 max. kN	Permissible load kg
K0768.08	**K0768.108**	**K0768.208**	M8	20	36	20	8,5	36	8	10	1,4	0,95	96,9
K0768.10	**K0768.110**	**K0768.210**	M10	25	45	25	10	45	10	12	2,3	1,7	173,4
K0768.12	**K0768.112**	**K0768.212**	M12	30	54	30	11	53	12	14	3,4	2,4	244,8
K0768.16	**K0768.116**	**K0768.216**	M16	35	63	35	13	62	14	16	7	5	510
K0768.20	**K0768.120**	**K0768.220**	M20	40	72	40	16	71	16	19	12	8,3	846,6
K0768.24	**K0768.124**	**K0768.224**	M24	50	90	50	20	90	20	24	18	12,7	1295,4

Ring nuts

similar to DIN 582

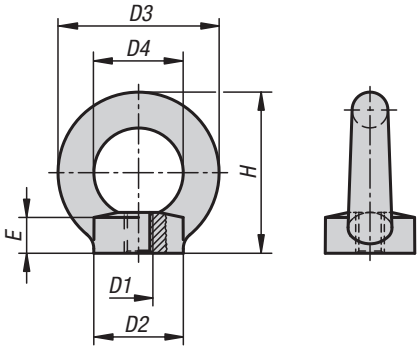

Material:
Stainless steel 1.4401.

Version:
Bright.

Sample order:
K1334.08

KIPP Ring nuts similar to DIN 582

Order No.	D1	D2	D3	D4	E	H
K1334.08	M8	20	36	20	6	36
K1334.10	M10	25	45	25	8	45
K1334.12	M12	30	54	30	10	53
K1334.16	M16	35	63	35	12	62
K1334.20	M20	40	72	40	14	71

Ring bolts rotatable

high-strength grade 10

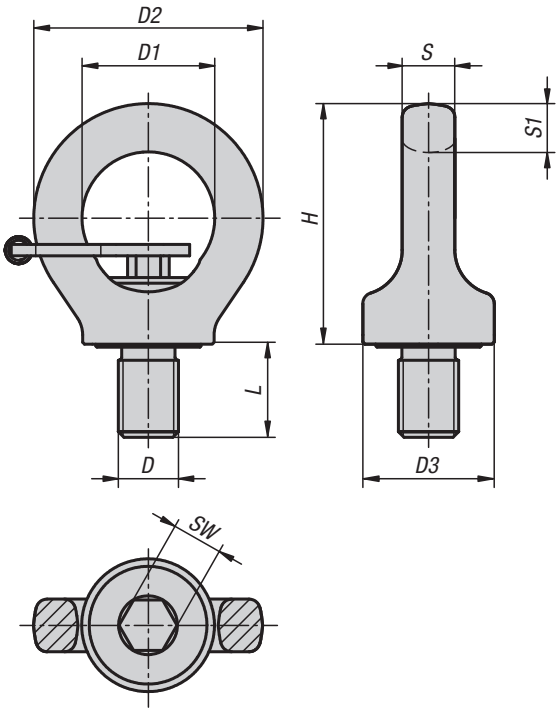

Material:
Ring 1.6541 steel.
Screw steel.

Version:
Ring forged and high tensile tempered.
100% electromagnetic crack tested per EN 1677-1, 4x safety factor.
Plastic-coated.
Thread grade 10.9.

Sample order:
K0769.08151

Note:
In contrast to DIN 580 ring bolts this ring bolt is rotatable, therefore the load direction is adjustable and unintended tightening or loosening is negated.

– 4x safety factor
– lateral loading up to 90° is possible
– ring can rotate 360° with tightened screw

The listed load values apply for a minimum screw length of 1x nominal thread diameter in steel with a minimum tensile strength of 363 N/mm², at an application temperature of -20 °C to +100 °C.

Maximum lifting weight "G" in kg for different sling types

Sling configuration	G	G	G	G	G		G	
No. of slings	1	2	1	2	2	2	3 - 4	3 - 4
Sling angle ∢	0°	0°	90°	90°	0°-45°	45°-60°	0°-45°	45°-60°
M8	1000	2000	300	600	420	300	630	450
M10	1000	2000	400	800	560	400	840	600
M12	2000	4000	750	1500	1000	750	1600	1120
M16	4000	8000	1500	3000	2000	1500	3150	2250
M20	6000	12000	2300	4600	3220	2300	4830	3450
M24	8000	16000	3200	6400	4480	3200	6700	4800
M30	12000	24000	4500	9000	6300	4500	9400	6700

KIPP Rotatable ring bolts, high-strength grade 10

Order No.	Version 2	D	D1	D2	D3	H	L	S	S1	SW	Permissible load kg
K0769.08151	with hex key	M8	25	44	25	47	12	9	9,5	6	300
K0769.10151	with hex key	M10	25	44	26	47	15	9	9,5	6	400
K0769.12181	with hex key	M12	30	52	34	55	18	11	11	8	750
K0769.16241	with hex key	M16	35	61	35	64	24	14	13	10	1500
K0769.20301	with hex key	M20	40	70	44	74	30	16	15	12	2300
K0769.24361	with hex key	M24	48	84	52	91	36	19	18	14	3200
K0769.30451	with hex key	M30	60	105	61	112	45	25	22,5	17	4500
K0769.08150	without hex key	M8	25	44	25	47	12	8	11	6	300
K0769.10150	without hex key	M10	25	44	25	47	15	8	11	6	400
K0769.12180	without hex key	M12	30	52	33	55	18	10	13	8	750
K0769.16240	without hex key	M16	35	61	35	64	24	14	13	10	1500
K0769.20300	without hex key	M20	40	70	44	74	30	16	17	12	2300
K0769.24360	without hex key	M24	48	84	52	91	36	19	21	14	3200
K0769.30450	without hex key	M30	60	108	62	112	45	27	26	17	4500

Ring bolts

swivel, 360° rotatable, grade 8

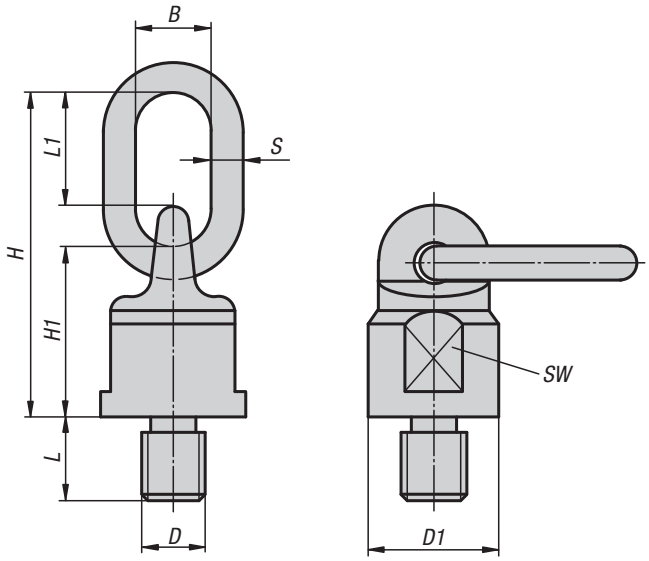

Material:
Steel.

Version:
Quality class 8, ball bearing;
red plastic-coated

Sample order:
K0770.1018

Note:
Compact and light design, full loading on all sides. 4x safety factor against breakage in all loading axis. Rotatable 360°. Link swivel range max. 180°. The ball bearing allows the ring to rotate even under load.

Lifting or securing loads, swivel rings have many uses.

For the loading capacity to be valid it must be ensured that the ring is in line with the load. The swivel face must lie flat on the support beam and the screw must always be screwed in fully.

Maximum lifting weight "G" in kg for different sling types

Sling confguration	G	G	G	G	G		G	
No. of slings	1	2	1	2	2	2	3 - 4	3 - 4
sling angle ∢	0°	0°	90°	90°	0°-45°	45°-60°	0°-45°	45°-60°
M10	600	1200	300	600	420	300	630	450
M12	1000	2000	500	1000	750	500	1100	750
M16	2000	4000	1120	2000	1500	1120	2360	1600
M20	4000	8000	2000	4000	2800	2000	4000	3000
M24	6300	12500	3150	6300	4250	3150	6300	4750
M30	10600	21200	5300	10600	7100	5800	11200	8000
M36	12500	25000	8000	16000	11200	8000	16800	12000

KIPP Ring bolts, swivel, rotatable 360°, grade 8

Order No.	B	D	D1	H	H1	L	L1	S	SW	Permissible load kg
K0770.1018	30	M10	38	105	50	18	46	13	30	300
K0770.1218	30	M12	38	105	50	18	46	13	30	500
K0770.1620	30	M16	38	105	50	20	46	13	30	1120
K0770.2030	34	M20	50	131	61	30	57	16	40	2000
K0770.2430	40	M24	58	153	68	30	70	19	48	3150
K0770.3035	40	M30	75	165	80	35	65	20	65	5300
K0770.3654	50	M36	85	205	95	54	90	22	75	8000

Weld-on D-rings

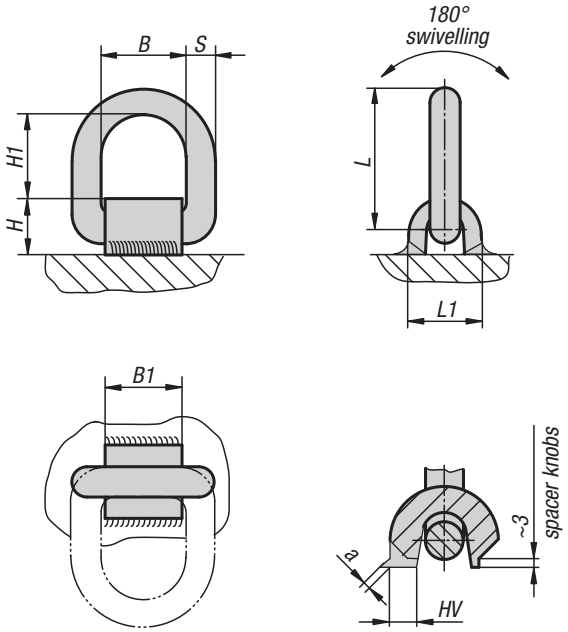

Material:
Eye 1.6541 steel.
Welding block, S355JR steel.

Version:
D-ring forged, high tensile tempered, red plastic coated.
Welding block forged, high tensile tempered, bright.

Sample order:
K0773.1000

Note:
Weld-on D-rings enable quick installation.

They offer a compact design and can be loaded from all sides, with 4x safety factor against breakage.

The welding block is forged from easy to weld S355JR (St 52-3). The small knobs serve as spacers for the air gap required for fillet welding (ca. 3 mm). The load data given in the table is clearly marked on the welding block, they apply to worst scenario cases for the lifting type shown.

Welding must be carried out by a proficient welder certified to EN 287-1.

Maximum lifting weight "G" in kg for different sling types

Sling configuration	G	G	G	G	G		G	
No. of slings	1	2	1	2	2	2	3 - 4	3 - 4
Sling angle ∢	0°	0°	90°	90°	0°-45°	45°-60°	0°-45°	45°-60°
K0773.1***	1600	3200	1120	2240	1500	1120	2360	1600
K0773.2***	3000	6000	2000	4000	2800	2000	4000	3000
K0773.3***	4750	9500	3150	6300	4250	3150	6300	4750
K0773.5***	8000	16000	5300	10600	7100	5300	11200	8000

KIPP Weld-on D-rings

Order No. without spring strip	Order No. with spring strip	B	B1	H	H1	L	L1	S	Weld seam	Permissible load kg
K0773.1000	**K0773.1001**	40	38	32	40	73	38	13	HV 5 + a3	1120
K0773.2000	**K0773.2001**	41	38	32	45	81	40	13	HV 5 + a3	2000
K0773.3000	**K0773.3001**	45	43	38	45	87	42	17	HV 8 + a3	3150
K0773.5000	**K0773.5001**	55	50	48	57	108	60	22	HV 12 + a4	5300

D-Shackles

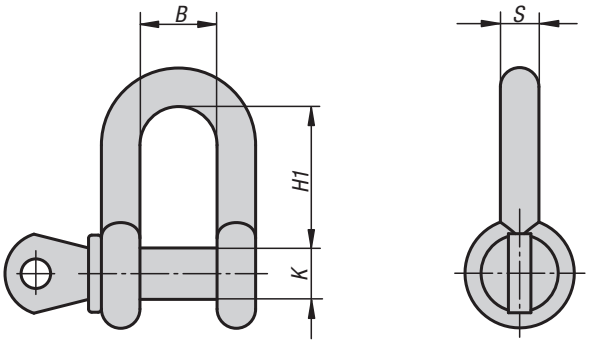

Material:
Steel.

Version:
D form

Sample order:
K1059.0050008

Note:
Shackles and bolts may vary in colour.
Paint may cause the thread to be stiff.

KIPP D-Shackles

Order No.	B	S	K	H1	Inches	Permissible load kg
K1059.0050008	12	7	8	22,5	1/4	500
K1059.0075010	13,5	9	10	25,5	5/16	750
K1059.0100011	17	10	11	31	3/8	1000
K1059.0150012	18,5	11	12	36	7/16	1500
K1059.0200016	20	13,5	16	42	1/2	2000
K1059.0325019	27	16	19	51	5/8	3250
K1059.0475022	31	19	22	64	3/4	4750
K1059.0650025	36	22	25	73	7/8	6500
K1059.0850028	43	25	28	80	1	8500

Bow shackles

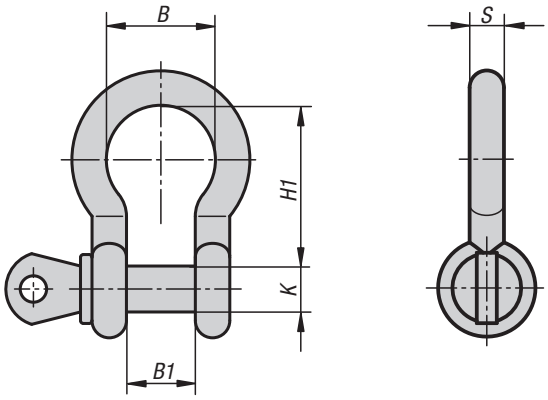

Material:
Steel.

Version:
Bow form.

Sample order:
K1058.0100011

Note:
Shackles and bolts may vary in colour.
Paint may cause the thread to be stiff.

KIPP Bow shackle

Order No.	B	B1	S	K	H1	Inches	Permissible load kg
K1058.0050008	20	12	7	8	28	1/4	500
K1058.0075010	21	12,5	9	10	31	5/16	750
K1058.0100011	26	15,5	10	11	36,5	3/8	1000
K1058.0150012	29	17,5	11	12	41,5	7/16	1500
K1058.0200016	32	20	13,5	16	47	1/2	2000
K1058.0325019	43	26	16	19	60	5/8	3250
K1058.0475022	51	31	19	22	71	3/4	4750
K1058.0650025	58	36	22	26	83	7/8	6500
K1058.0850028	68	43	25	28	92	1	8500

Mounting instructions and specifications
Ball transfer units

Ball transfer units allow bulky goods to be easily transported, rotated and directed. They have long proven their worth in conveyor systems, feeder systems, machining centres and packaging plants.

Applications:

Conveyor technology
- ball pallets, rotary tables and sorting and distribution switch points
- crossing points in permanent conveyance systems
- Airport luggage sorting plants
- Steel pipe transport
- Lifting platforms

General machine shops
- Feed tables for sheetmetal handling machines
- Fixtures for bending machines
- Conveyors for machining centres
- Motor driven assembly aids in heavy engineering

Other applications
- Custom machine construction
- Aerospace technology
- Beverage production
- Stone processing

Ball transfer units have a steel housing with a hardened ball cup. This serves as the track for a number of small bearing balls. These bearing balls roll in the cup with the rotation of the load ball.
Ball transfer units are designed so that precise rolling and load carrying is guaranteed in all positions. Ball transfer units are low maintenance and almost all types have an oil soaked felt seal to protect from dirt.

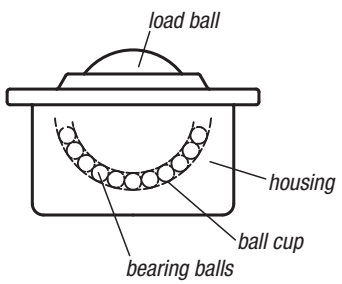

Calculating the ball transfer unit loading
To calculate the loading for ball transfer units, divide the weight of the transported goods by 3. With good coordination of the load ball surface and, depending on the properties of the goods transported, the number of load bearing ball transfer units can also be calculated.

Example:
Weight of the transported goods = 300 kg

Ball transfer unit loading:

$$F = \frac{300\ \text{kg}}{3} = 100\ \text{kg}$$

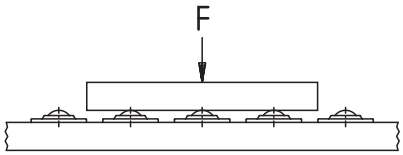

Arrangement of the ball transfer units
The arrangement of the ball transfer units depends on the surface area of the goods to be transported. By goods with a uniform, level surface area, such as the base of boxes, the distance between the ball transfer units is simply calculated from the length of the shortest edge divided by 2.5.

Example:
Surface area of goods
= 500 x 1000 mm

Distance between ball transfer units:

$$a = \frac{500\ \text{mm}}{2{,}5} = 200\ \text{mm}$$

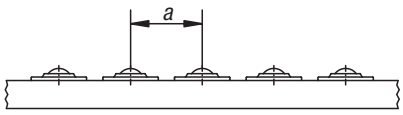

Transport speed and load capacity
The recommended conveyance speed is 1 m/sec. With polyamid load balls 0.25 m/sec. The specified load rating applies to all mounting positions and relates to 106 revolutions of the load ball. By extended use in excess of 1 m/sec and depending on the loading, the temperature can be expected to rise and the useful life reduced, particularly with balls Ø60 to Ø90.

Calculating the lifespan

$$L = \left(\frac{C}{F}\right)^3 . 10^6 \ \text{revs}$$

L = lifespan
C = load rating (N)
F = loading (N)

Attention:
Use high temperature lubricant!
Follow manufacturer's instructions!
It is possible that the existing lubrication oil may have to be washed out.

Temperature load ball		Temperature factor fT
steel °C	polyamid °C	
125	40	0,9
150	50	0,8
175	60	0,7
-	70	0,6
200	80	0,5

Temperature resistance
For ball transfer units with a felt seal the temperature resistance is 100 °C by constant temperature.

Only non-galvanised ball transfer units with a steel ball and no felt seal can be used at temperatures in excess of 100 °C. Note the load rating reduction! Multiply the load rating by the temperature factor (table).

Calculating the loading by undersprung ball transfer units.
For these types the determining factor is the value given in the "Pre-tension" column of the table. The weight of the transported goods is divided by the number of supporting ball transfer units.

Ball transfer units mini

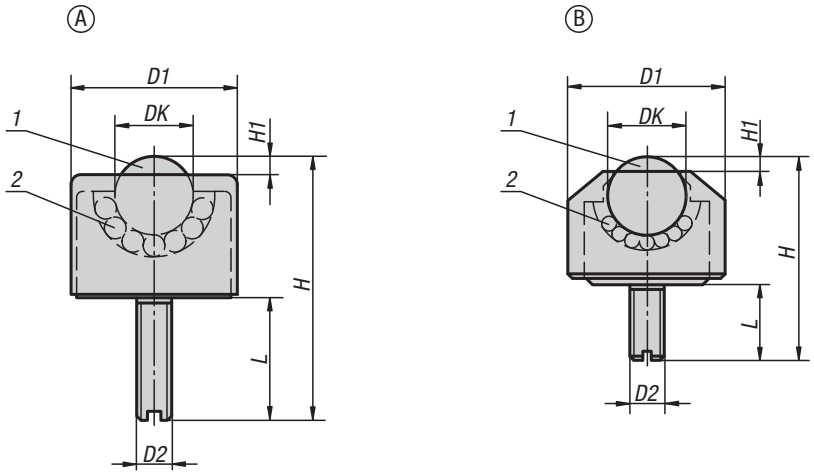

Material:
Steel version:
Load ball steel.
Bearing balls steel.
Housing electro zinc-plated steel.
Cover electro zinc-plated steel.

Stainless steel version:
Load ball stainless steel.
Bearing balls stainless steel.
Housing stainless steel.
Cover aluminium.

Sample order:
K0749.1105

Note:
The ball transfer units comprise a housing with integrated bearing shell, a cover, a load ball and several supporting balls. For use in measuring instruments, material conveyance in clean rooms and miniature mechanisms.

Drawing reference:
1) load ball
2) bearing balls

KIPP Ball transfer units mini

Order No.	Form	Main material	DK	D1	D2	H	H1	L	Load rating C (N)
K0749.1105	A	steel	4,8	13	M6	24	1	15	100
K0749.1106	A	steel	6,4	17	M6	26	2	15	200
K0749.1108	A	steel	7,9	18	M8	32	2	18	300
K0749.1110	A	steel	9,6	23	M8	40	2	20	400
K0749.1113	A	steel	12,7	28	M8	48	3,5	23	500
K0749.1216	B	steel	15,8	24	M6	32,5	4	12	700
K0749.2205	B	stainless steel	4,8	8	M2	8,5	1	2,5	50
K0749.2206	B	stainless steel	6,4	13	M3	16,5	2	6	100
K0749.2208	B	stainless steel	7,9	15	M4	20,5	2	8	150

Ball transfer units with stud

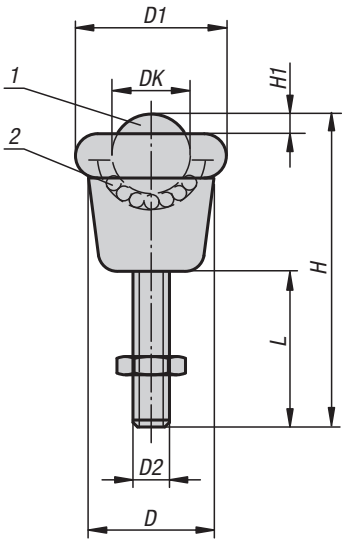

Material:
Balls stainless steel 1.4021.
Housing stainless steel 1.4301.

Version:
Bright.

Sample order:
K1322.190820

Note:
The ball transfer units has a large support area.
The stud fastening allows for high stability and heavy loading.
The formed wiper seal is external.

Drawing reference:
1) load ball
2) bearing balls

KIPP Ball transfer units with stud

Order No.	DK	D	D1	D2	H	H1	L	Tightening torque of screws Nm	Load rating C (N)
K1322.190820	19	25,4	32,1	M8	50,2	4,7	20	15	250
K1322.190835	19	25,4	32,1	M8	65,2	4,7	35	15	250

Ball transfer units

with steel housing

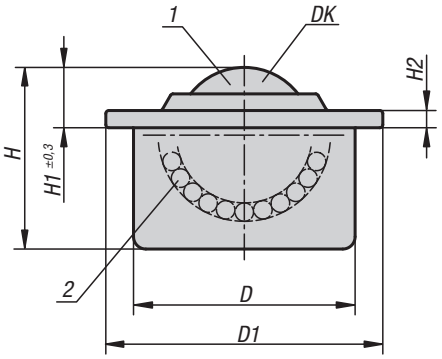

Material:
Electro zinc-plated steel or stainless steel.

Sample order:
K0760.122

Note:
Ball transfer units with steel housing have a felt seal to protect against dirt. K0760-115 has no felt seal.

Drawing reference:
1) load ball
2) bearing balls

Form B: cap and housing electro zinc-plated, balls steel
Form C: cap and housing electro zinc-plated, balls stainless steel
Form D: cap, housing and balls stainless steel

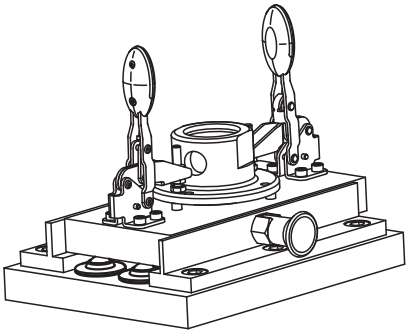

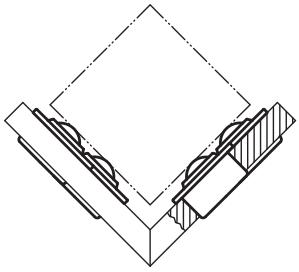

KIPP Ball transfer units with steel housing

Order No.	Form	DK	D	D1	H	H1	H2	Load rating C (N)	Suitable tolerance ring
K0760.115	B	15,8	24±0,065	31	21	9,5	2,8	600	K0766.024
K0760.122	B	22,2	36±0,080	45	30	9,8	2,8	1600	K0766.036
K0760.130	B	30	45±0,080	55	37	13,8	4	3000	K0766.045
K0760.145	B	44,5	62±0,095	75	53,5	19	4	6100	K0766.062
K0760.215	C	15,8	24±0,065	31	21	9,5	2,8	600	K0766.024
K0760.222	C	22,2	36±0,080	45	30	9,8	2,8	1600	K0766.036
K0760.230	C	30	45±0,080	55	37	13,8	4	3000	K0766.045
K0760.245	C	44,5	62±0,095	75	53,5	19	4	6100	K0766.062
K0760.315	D	15,8	24±0,065	31	21	9,5	2,8	380	K0766.024
K0760.322	D	22,2	36±0,080	45	30	9,8	2,8	1000	K0766.036
K0760.330	D	30	45±0,080	55	37	13,8	4	2000	K0766.045

Ball transfer units

with steel housing and plastic ball

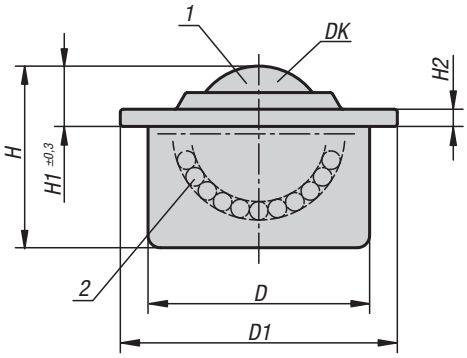

Material:
Electro zinc-plated steel.
Polyamid PA 66 ball.

Sample order:
K0761.122

Note:
Ball transfer units with plastic balls are particularly suitable for transporting sensitive materials such as polished aluminium, brass and steel sheets or glass. They have a felt seal to protect against dirt.

Drawing reference:
1) load ball
2) bearing balls

Form B: cap and housing electro zinc-plated, bearing balls steel.
Form C: cap and housing electro zinc-plated, bearing balls stainless steel

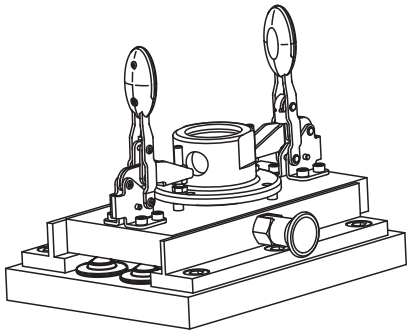

KIPP Ball transfer units with steel housing and plastic ball

Order No.	Form	DK	D	D1	H	H1	H2	Load rating C (N)	Suitable tolerance ring
K0761.115	B	15,8	24±0,065	31	21	9,5	2,8	100	K0766.024
K0761.122	B	22,2	36±0,080	45	30	9,6	2,8	200	K0766.036
K0761.130	B	30	45±0,080	55	37	13,6	4	250	K0766.045
K0761.215	C	15,8	24±0,065	31	21	9,5	2,8	100	K0766.024
K0761.222	C	22,2	36±0,080	45	30	9,6	2,8	200	K0766.036
K0761.230	C	30	45±0,080	55	37	13,6	4	250	K0766.045

Ball transfer units

undersprung

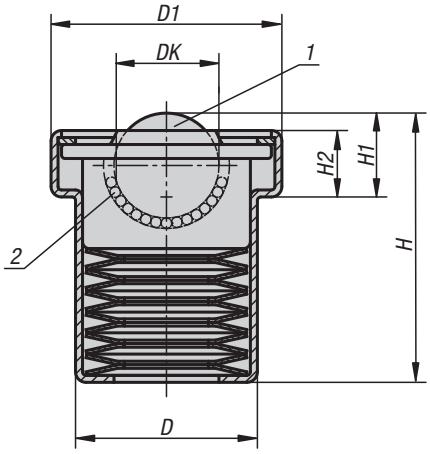

Material:
Steel electro zinc-plated.

Sample order:
K0762.122

Note:
Undersprung ball transfer units allow for even distribution of loads for goods with uneven surfaces.
When used in machines such as punch presses and bend form machines the ball rollers spring back up after the forming process and the finished article can be rolled off.

By the “End tension (N)” the ball has completely receded into the housing.

Drawing reference:
1) load ball
2) bearing balls

Form B: cap and housing electro zinc-plated, balls steel
Form C: cap and housing electro zinc-plated, balls stainless steel

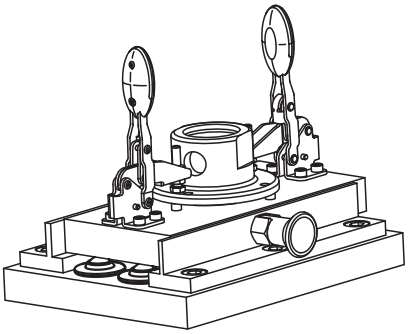

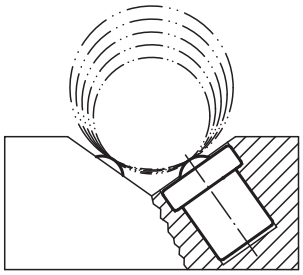

KIPP Ball transfer units, undersprung

Order No.	Form	DK	D	D1	H	H1	H2	Pre-tension (N)	End tension (N)	Tol. for pre and end tension (%)
K0762.122	B	22,2	39	50	51,5	18,5	14	730	860	+25 / -7,5
K0762.130	B	30	48,2	62	70	24,4	17,7	1350	1600	+15 / -7,5
K0762.145	B	45	66,4	85	100,5	35,6	24,2	2280	2770	+15 / -7,5
K0762.222	C	22,2	39	50	51,5	18,5	14	730	860	+25 / -7,5
K0762.230	C	30	48,2	62	70	24,4	17,7	1350	1600	+15 / -7,5
K0762.245	C	45	66,4	85	100,5	35,6	24,2	2280	2770	+15 / -7,5

Ball transfer units

with solid steel housing

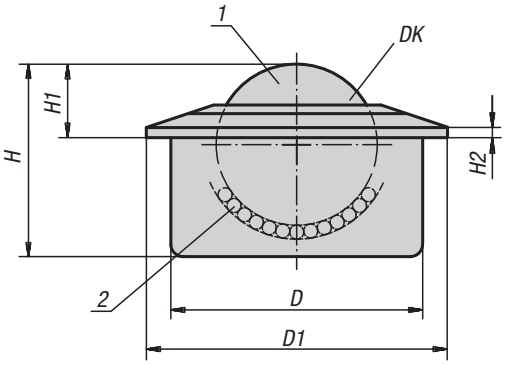

Material:
Steel electro zinc-plated.

Sample order:
K0763.160

Note:
Ball transfer units with solid housings remain functional even under heavy impact loads and extreme conditions.
They have a felt seal to protect against dirt.

Drawing reference:
1) load ball
2) bearing balls

Form B: cap and housing electro zinc-plated, balls steel
Form C: cap and housing electro zinc-plated, balls stainless steel

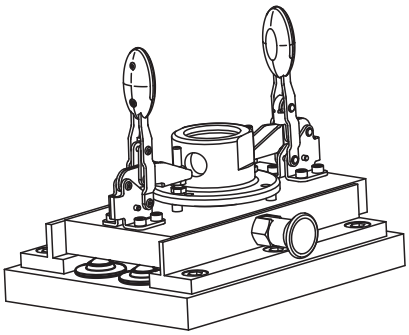

KIPP Ball transfer units with solid steel housing

Order No.	Form	DK	D	D1	H	H1	H2	Load rating C (N)	Suitable tolerance ring
K0763.160	B	57,1	100±0,1	117	77,5	29,5	5	15000	K0766.100
K0763.260	C	57,1	100±0,1	117	77,5	29,5	5	10000	K0766.100

Ball transfer units heavy duty

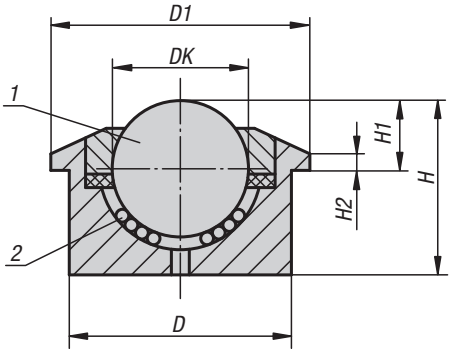

Material:
Balls stainless steel 1.4021.
Housing stainless steel 1.4301.

Version:
Bright.

Sample order:
K1323.322

Note:
Solid steel ball transfer units are designed for long life by impact loading.
The unit includes dust seals and self-cleaning apertures.
All units are supplied with solid steel housings and hardened surfaces.

Drawing reference:
1) load ball
2) bearing balls

KIPP Ball transfer units heavy duty

Order No.	DK	D1	D	H	H1	H2	Load rating C (N)
K1323.322	22,2	45	36±0,080	30,5	9,8±0,2	3	1200
K1323.330	30	55	45±0,080	36,8	13,8±0,2	3,4	2000
K1323.345	44,5	75	62±0,1	53,5	19	3,8	3000

Ball transfer units heavy duty

suitable for outdoor use

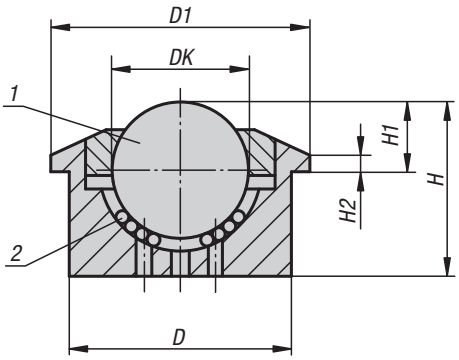

Material:
Balls stainless steel 1.4021.
Housing stainless steel 1.4301.

Version:
Bright.

Sample order:
K1325.330

Note:
Solid steel ball transfer units are designed for long life by impact loading.
All units are supplied with solid steel housings and hardened surfaces.
The large number of self-cleaning apertures give the ball transfer units a high self-cleaning efficiency making them suitable for outdoor use.

Drawing reference:
1) load ball
2) bearing balls

KIPP Ball transfer units, heavy duty, suitable for outdoor use

Order No.	DK	D1	D	H	H1	H2	Load rating C (N)
K1325.330	30	55	45±0,080	36,8	13,8±0,2	3,4	2000
K1325.345	44,5	75	62±0,1	53,5	19	3,8	3000

Ball transfer units

with fastening holes, without housing

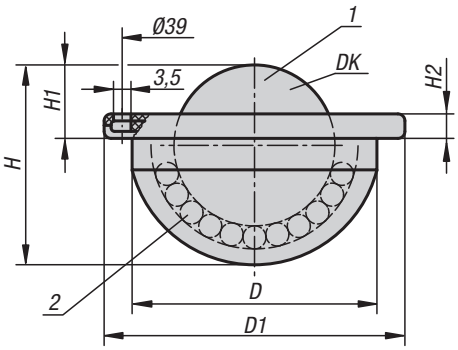

Material:
Steel electro zinc-plated.

Sample order:
K0764.122

Note:
Ball transfer units with fastening holes for easy installation and removal.

Drawing reference:
1) load ball
2) bearing balls

Form B: cap and housing electro zinc-plated, balls steel
Form C: cap and housing electro zinc-plated, balls stainless steel

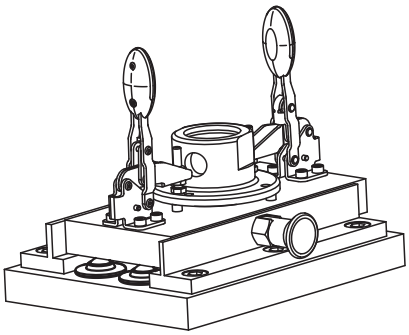

KIPP Ball transfer units with fastening holes, without housing

Order No.	Form	DK	D	D1	H	H1	H2	No. of fastening holes	Load rating C (N)
K0764.122	B	22	33-0,2	45	27,7	9,8±0,2	5	3	1200
K0764.222	C	22	33-0,2	45	27,7	9,8±0,2	5	3	900

Ball transfer units

with spring clips

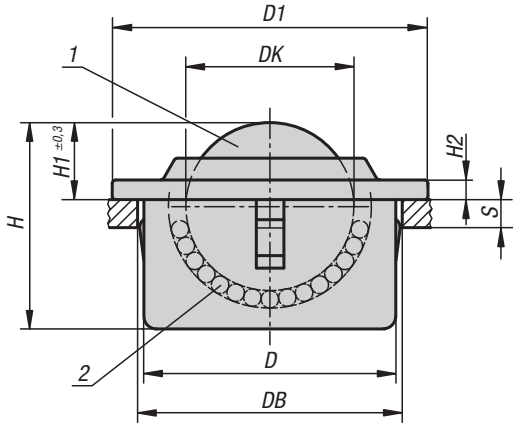

Material:
Steel electro zinc-plated.

Sample order:
K0765.122

Note:
Ball transfer units with spring clips for easy installation and removal from the functional side. The roller is held in place with spring clips, this permits generous tolerances in the receiving hole. They have a felt seal to protect against dirt.
S = Minimum nominal thickness of mounting base.

Drawing reference:
1) load ball
2) bearing balls

Form B: cap and housing electro zinc-plated, balls steel
Form C: cap and housing electro zinc-plated, balls stainless steel

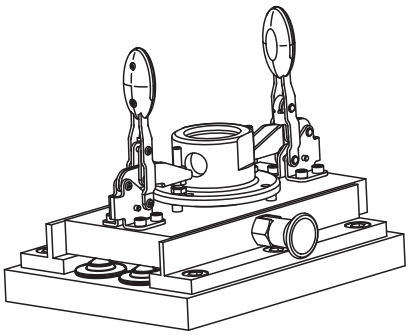

KIPP Ball transfer units with spring clips

Order No.	Form	DK	D	D1	Receiver-Ø DB	H	H1	H2	S	Load rating C (N)
K0765.115	B	15,8	24±0,1	31	25 +0,5	21	9,5	2,8	2	600
K0765.122	B	22,2	36±0,1	45	37 +0,5	30	9,8	2,8	3	1600
K0765.130	B	30	45±0,1	55	46 +0,5	37	13,8	4	6	3000
K0765.215	C	15,8	24±0,1	31	25 +0,5	21	9,5	2,8	2	600
K0765.222	C	22,2	36±0,1	45	37 +0,5	30	9,8	2,8	3	1600
K0765.230	C	30	45±0,1	55	46 +0,5	37	13,8	4	6	3000

Tolerance rings

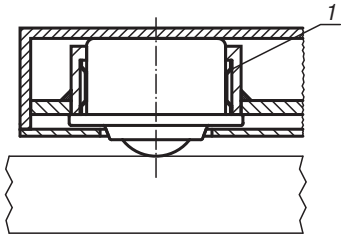

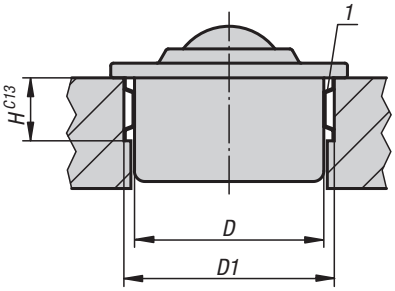

Material:
Spring band steel

Sample order:
K0766.024

Note:
The use of tolerance rings allows for a greater tolerance range between the parts being assemble. The ball transfer units can be fitted quickly and cost effectively.

Drawing reference:
1) tolerance ring

KIPP Tolerance rings

Order No.	D	Assembly dimensions D1	Assembly dimensions H
K0766.024	24	25,7 +0,2	7
K0766.036	36	37,7 +0,2	12
K0766.045	45	46,7 +0,2	12
K0766.062	62	64,1 +0,3	15
K0766.100	100	102,5 +0,35	19

Notes