Tension levers, flat, external thread, 15°

Item description/product images

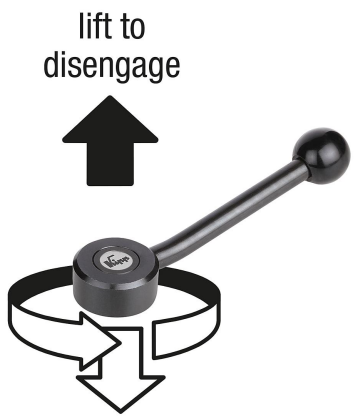

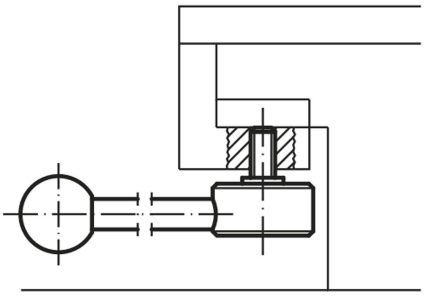

Description

Material:
Steel parts grade 5.8.
Ball knob black plastic.

Version:
Black oxidised.

On request:
Other threads, screw lengths and special versions.
Dimensions “H1” and “A” available in other lengths at extra charge.

Drawing reference:
1) flat point DIN EN ISO 4753

Drawings

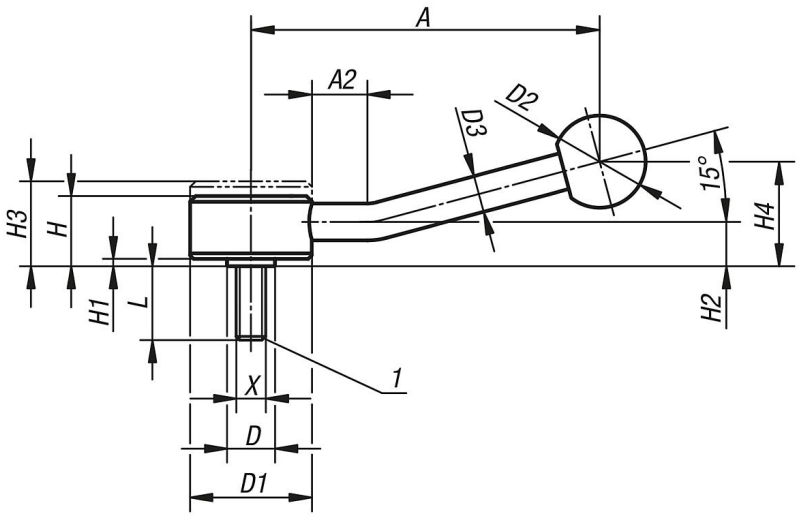

Tension levers, flat, external thread, 15°

Overview of items

Order No.	Form	X	L	A=Handle length	A2	D	D1	D2	D3	H	H1	H2	H3	H4	No. of teeth
K0114.1082X15	15°	M8	15	100	15	13,5	33	25	10	19	2	12	23	29	20
K0114.1082X20	15°	M8	20	100	15	13,5	33	25	10	19	2	12	23	29	20
K0114.1082X25	15°	M8	25	100	15	13,5	33	25	10	19	2	12	23	29	20
K0114.1082X30	15°	M8	30	100	15	13,5	33	25	10	19	2	12	23	29	20
K0114.1082X40	15°	M8	40	100	15	13,5	33	25	10	19	2	12	23	29	20
K0114.1082X50	15°	M8	50	100	15	13,5	33	25	10	19	2	12	23	29	20
K0114.1082X60	15°	M8	60	100	15	13,5	33	25	10	19	2	12	23	29	20
K0114.1102X15	15°	M10	15	100	15	13,5	33	25	10	19	2	12	23	29	20
K0114.1102X20	15°	M10	20	100	15	13,5	33	25	10	19	2	12	23	29	20
K0114.1102X25	15°	M10	25	100	15	13,5	33	25	10	19	2	12	23	29	20
K0114.1102X30	15°	M10	30	100	15	13,5	33	25	10	19	2	12	23	29	20
K0114.1102X40	15°	M10	40	100	15	13,5	33	25	10	19	2	12	23	29	20
K0114.1102X50	15°	M10	50	100	15	13,5	33	25	10	19	2	12	23	29	20
K0114.1102X60	15°	M10	60	100	15	13,5	33	25	10	19	2	12	23	29	20
K0114.2102X20	15°	M10	20	127	15	19	41	30	12	22	2	13,5	26	38	24
K0114.2102X25	15°	M10	25	127	15	19	41	30	12	22	2	13,5	26	38	24
K0114.2102X30	15°	M10	30	127	15	19	41	30	12	22	2	13,5	26	38	24
K0114.2102X40	15°	M10	40	127	15	19	41	30	12	22	2	13,5	26	38	24
K0114.2102X50	15°	M10	50	127	15	19	41	30	12	22	2	13,5	26	38	24
K0114.2102X60	15°	M10	60	127	15	19	41	30	12	22	2	13,5	26	38	24
K0114.2122X20	15°	M12	20	127	15	19	41	30	12	22	2	13,5	26	38	24
K0114.2122X25	15°	M12	25	127	15	19	41	30	12	22	2	13,5	26	38	24
K0114.2122X30	15°	M12	30	127	15	19	41	30	12	22	2	13,5	26	38	24
K0114.2122X40	15°	M12	40	127	15	19	41	30	12	22	2	13,5	26	38	24
K0114.2122X50	15°	M12	50	127	15	19	41	30	12	22	2	13,5	26	38	24
K0114.2122X60	15°	M12	60	127	15	19	41	30	12	22	2	13,5	26	38	24
K0114.3122X20	15°	M12	20	145	15	23	45	37	14	28	2	17	33	48	26
K0114.3122X25	15°	M12	25	145	15	23	45	37	14	28	2	17	33	48	26
K0114.3122X30	15°	M12	30	145	15	23	45	37	14	28	2	17	33	48	26
K0114.3122X40	15°	M12	40	145	15	23	45	37	14	28	2	17	33	48	26
K0114.3122X50	15°	M12	50	145	15	23	45	37	14	28	2	17	33	48	26
K0114.3122X60	15°	M12	60	145	15	23	45	37	14	28	2	17	33	48	26
K0114.3162X20	15°	M16	20	145	15	23	45	37	14	28	2	17	33	48	26
K0114.3162X25	15°	M16	25	145	15	23	45	37	14	28	2	17	33	48	26
K0114.3162X30	15°	M16	30	145	15	23	45	37	14	28	2	17	33	48	26
K0114.3162X40	15°	M16	40	145	15	23	45	37	14	28	2	17	33	48	26
K0114.3162X50	15°	M16	50	145	15	23	45	37	14	28	2	17	33	48	26
K0114.3162X60	15°	M16	60	145	15	23	45	37	14	28	2	17	33	48	26

© HEINRICH KIPP WERK GmbH & Co. KG