Workpiece stabiliser

Item description/product images

Description

Material:
Steel.

Version:
Telescopic clamping unit and fastening set black oxidised.
Shaft bright.

Note:
The length of the workpiece stabiliser is infinitely adjustable. The shaft can be securely clamped against tension and thrust by means of a locking mechanism.

The workpiece stabiliser consists of a telescopic clamping unit with two fastening sets and two clamping balls with Form B cups for system sizes 25 or 50.

On request:
Fastening set with clamping ball.

Drawings

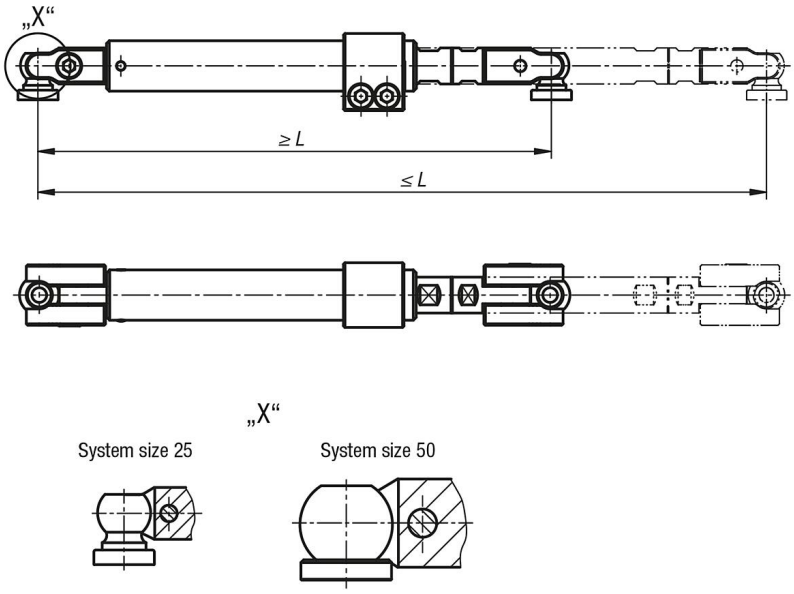

Overview of items

Workpiece stabiliser

Order No.	Size	L min.	L max.	weight kg
K1170.255305	25	255	305	1,9
K1170.355505	25	355	505	2,5
K1170.50350450	50	350	450	6,7
K1170.50450650	50	450	650	7,7

© HEINRICH KIPP WERK GmbH & Co. KG

Overview of items